Workshop Manual

Golf Variant 2007 ➤
Golf Variant 2010 ➤
Jetta 2005 ➤
Jetta 2011 ➤

Electrical System, General Information

Edition 05.2010

Protected by copyright. Copying for private or commercial purposes, in part or in whole, is not permitted unless authorised by Volkswagen AG. Volkswagen AG does not guarantee or accept any liability with respect to the correctness of information in this document. Copyright by Volkswagen AG.

Downloaded from www.Manualslib.com manuals search engine

List of Workshop Manual Repair GroupsList of Workshop Manual Repair GroupsList of Workshop Manual Repair Groups

Repair Group

27 - Starter, current supply, CCS
90 - Gauges, instruments
92 - Windscreen wash/wipe system
94 - Lights, bulbs, switches - exterior
96 - Lights, bulbs, switches - interior
97 - Wiring

Protected by copyright. Copying for private or commercial purposes, in part or in whole, is not permitted unless authorised by Volkswagen AG. Volkswagen AG does not guarantee or accept any liability with respect to the correctness of information in this document. Copyright by Volkswagen AG.

Technical information should always be available to the foremen and mechanics, because their careful and constant adherence to the instructions is essential to ensure vehicle road-worthiness and safety. In addition, the normal basic safety precautions for working on motor vehicles must, as a matter of course, be observed.

All rights reserved.
No reproduction without prior agreement from publisher.

Copyright © 2010 Volkswagen AG, Wolfsburg

D3E801F2B16

Downloaded from www.Manualslib.com manuals search engine

Contents

27 - Starter, current supply, CCS . . . 1

1 Battery A . . . 1
1.1 Fundamentals for batteries A . . . 1
1.2 Types of battery . . . 1
1.3 Warning notices and safety regulations . . . 2
1.4 Battery terminal connection . . . 4

2 Checking battery A . . . 5
2.1 Testing different battery types . . . 5
2.2 Visual check . . . 6
2.3 Test of colour display of magic eye . . . 7
2.4 Battery tester with printer VAS 5097 A . . . 8
2.5 Battery tester with printer VAS 6161 . . . 13
2.6 Midtronics MCR340V battery tester (only for USA/Canada) . . . 19
2.7 Current draw test . . . 23
2.8 Checking no-load voltage of battery A (stock and stored vehicles) . . . 24

3 Charging battery A . . . 26
3.1 Battery charger VAS 5095 A . . . 26
3.2 Battery charger VAS 5900 . . . 31
3.3 Battery charger VAS 5903 . . . 43
3.4 Battery charger VAS 5906 . . . 55
3.5 Midtronics INC 940 battery charger (only for USA/Canada) . . . 57
3.6 Solar panel VAS 6102 A . . . 62
3.7 Totally discharged batteries A . . . 63

4 Cruise control system (CCS) . . . 65
4.1 Activating and deactivating cruise control system (CCS) . . . 65

90 - Gauges, instruments . . . 66

92 - Windscreen wash/wipe system . . . 67

1 Washer fluid line hose couplings . . . 67
1.1 Windscreen and rear window washer system . . . 67
1.2 Headlight washer system . . . 68

2 Hose repair . . . 69
2.1 General description . . . 69
2.2 Repairing smooth pipe . . . 69
2.3 Repairing corrugated pipe . . . 69

3 Distinguishing features of jointless wiper blades . . . 71

94 - Lights, bulbs, switches - exterior . . . 72

1 Operation and safety notes for gas discharge bulbs . . . 72

96 - Lights, bulbs, switches - interior . . . 75

1 12 V socket U5 . . . 75
1.1 Removing and installing 12 V socket U5 . . . 75
1.2 Removing and installing socket illumination bulb L42 . . . 75

2 Cigarette lighter U1 . . . 76
2.1 General description . . . 76
2.2 Assembly overview . . . 77
2.3 Removing and installing cigarette lighter socket . . . 78
2.4 Removing and installing cigarette lighter illumination bulb L28 . . . 80

97 - Wiring . . . 82

Protected by copyright. Copying or distribution is prohibited unless authorised by Volkswagen AG. Volkswagen AG does not guarantee or accept any liability with respect to the correctness of information in this document. Copyright by Volkswagen AG.

Downloaded from www.Manualslib.com manuals search engine

1 Vehicle diagnosis, testing and information system VAS 5051B 82
1.1 Connecting vehicle diagnosis, testing and information system VAS 5051B 82
1.2 Connecting vehicle diagnostic tester Bora Model Year 1998 to 2003 83
2 Repairs to wiring harnesses and connectors 85
2.1 Wiring harness repair set 85
2.2 Tool descriptions 86
2.3 General notes concerning repairs to vehicle electrical system 90
2.4 Repairs to wiring harnesses 91
2.5 Repairs to contact housings and connectors 101
2.6 Releasing and dismantling contact housings 105
3 Contact surface cleaning set VAS 6410 111
3.1 Using the contact surface cleaning set VAS 6410 111
4 Renewing Lambda probe 117
4.1 Renewing LSF Lambda probe (4-pin) 117
4.2 Renewing LSU Lambda probe (6-pin) 118
4.3 Types of protective tube on uniform Lambda probes 119

Protected by copyright. Copying for private or commercial purposes, in part or in whole, is not permitted unless authorised by Volkswagen AG. Volkswagen AG does not guarantee or accept any liability with respect to the correctness of information in this document. Copyright by Volkswagen AG.

Downloaded from www.Manualslib.com manuals search engine

27 – Starter, current supply, CCS

1 Battery -A-

WARNING

Danger of injury! Observe warning notices and safety regulations ⇒ page 2 !

Caution

To prevent damage to battery -A- and vehicle, the following instructions relating to types of battery must be observed ⇒ page 1 .

1.1 Fundamentals for batteries -A-

To ensure long use of battery -A- , the battery must be checked, serviced and maintained according to the instructions in this manual.

Apart from supplying energy for starting the engine, battery -A- has other tasks: it acts as a buffer and supplies electrical energy to the complete vehicle electrical system.

Note

Refer also to ⇒ Self-study programme No. 234 ; Vehicle batteries .

1.2 Types of battery

General notes

Caution

The description for the following batteries -A- is for maintenance-free batteries -A- . Do not remove any stickers and do not fill battery with distilled water. Only perform a visual check. Refer to chapter, Checking battery ⇒ page 5 .

1.2.1 Battery -A- with magic eye

Maintenance-free battery -A- with liquid electrolyte (wet battery).

Caution

Do not remove any stickers and do not fill battery with distilled water. Only perform a visual check. Refer to chapter, Checking battery ⇒ page 5 .

Protected by copyright. Copyright by Volkswagen AG. Not permitted unless authorised by Volkswagen AG. Volkswagen AG does not guarantee or accept any liability with respect to the correctness of information in this document.

Downloaded from www.Manualslib.com manuals search engine

Protected by copyright. Copying for private or commercial purposes, in part or in whole, is not permitted unless authorised by Volkswagen AG. Volkswagen AG does not guarantee or accept any liability with respect to the correctness of information in this document. Copyright by Volkswagen AG.

WARNING

Do not test or charge batteries -A- whose magic eye is "colourless/light yellow". Do not slave/jump start the vehicle!

Danger of explosion when checking and charging or slave/jump starting

These batteries -A- must be replaced.

This battery -A- is equipped with a magic eye. The magic eye shows different colours to provide information concerning the level of electrolyte and the charge level of the battery -A- .

Checking colour shown by the magic eye ⇒ page 7

1.2.2 Absorbent glass mat (AGM battery)

Maintenance-free battery -A- containing electrolyte but without a magic eye.

Lead-acid battery whereby the electrolyte is held in an absorbent glass mat (AGM). Battery -A- is sealed and fitted with valves.

AGM is the abbreviation for "Absorbent Glass Mat".

Due to the electrolyte being held in the mat, these batteries -A- do not have a magic eye. Absorbent glass mat batteries are identified by the abbreviation AGM on the battery -A- .

Note

Always replace an absorbent glass mat battery with another absorbent glass mat battery.

1.3 Warning notices and safety regulations

1.3.1 Dangers involved in handling of batteries -A-

Recognition and avoidance of hazards

Batteries -A- can be dangerous. These dangers can be avoided when the warnings on the battery -A- , in the ⇒ owner's manual and in ELSA are observed.

Downloaded from www.Manualslib.com manuals search engine

WARNING

- *Untrained personnel, e.g. apprentices, trainees etc., may only work on batteries -A- when supervised by a vehicle mechanic/foreman or vehicle electrician/foreman.*
- *Acid is highly corrosive. Incorrect handling of batteries -A- could expose staff to harmful effects caused by electrolyte. Suitable measures must therefore be taken to ensure that equipment/solutions etc. are available to neutralize acid burns. A suitable solution is soap solution.*
- *Electrolyte leaks from the battery -A- can cause skin burns, acid deterioration and corrosion on the vehicle. This may damage safety relevant components on the vehicle.*
- *The gas which forms when charging and the gas which may escape through vent valves is explosive. In extreme cases, incorrect handling can cause the battery -A- to explode as a result of gas leaks.*
- *Batteries -A- whose magic eye is "colourless/light yellow" have to be replaced. Do not test or charge them and do not slave/jump start the vehicle. Danger of explosion when checking and charging or slave/jump starting*
- *It is prohibited to cause sparks through grinding, welding, cutting operations and use naked lights in the vicinity of batteries. Smoking is also prohibited. Sparks generated by electrostatic charging must also be avoided. The vehicle body must be touched before touching the battery -A- .*
- *Only work on batteries -A- in well ventilated and suitable rooms.*

1.3.2 Safety markings on battery -A-

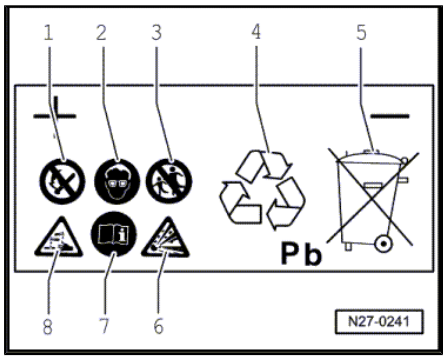

Safety markings on battery -A-

1 - Fire, sparks, naked light and smoking are prohibited when handling batteries -A- . Avoid sparks as well as electrostatic discharge when working with cables and electrical units. Avoid short circuits. For this reason, do not place any tools on battery -A- .

2 - Wear eye protection before commencing work on battery -A- .

3 - Keep children away from acid and batteries -A- .

4 - Disposal: old batteries are classed as hazardous waste. They may only be disposed of through a suitable collection centre and only in accordance with respective legislation.

5 - Never dispose of old batteries in household waste system!

6 - Wherever batteries -A- are handled, there is a risk of explosion. Charging batteries -A- creates a highly explosive oxyhydrogen gas mixture.

7 - Follow instructions concerning batteries -A- , in ELSA and in ⇒ owner's manual .

8 - Risk of corrosion: Electrolyte acid is highly corrosive, which is why protective gloves and eye protection must be worn when working on battery -A- . The battery -A- must not be tilted as acid could leak from battery vents.

Copyright by Volkswagen AG. Copying for private or commercial purposes, in part or in whole, is not permitted unless authorised by Volkswagen AG. Volkswagen AG does not guarantee or accept any liability with respect to the correctness of information in this document.

Downloaded from www.Manualslib.com manuals search engine

1.4 Battery terminal connection

Caution

To prevent damage to the battery terminal clamps and battery terminals, the following should be observed:

- *The battery terminal clamps should only be fitted by hand and without using force.*
- *Battery terminals should not be coated with grease.*
- *The battery terminal clamps should be fitted so that the battery terminal is either flush with the clamp or protruding from it.*
- *Once the battery terminal clamps have been tightened to the specified torque, the threaded connections should not be tightened any further.*

Prescribed torque for terminal clamps ⇒ Electrical System; Rep. Gr. 27 of the respective vehicle.

Protected by copyright. Copying for private or commercial purposes, in part or in whole, is not permitted unless authorised by Volkswagen AG. Volkswagen AG does not guarantee or accept any liability with respect to the correctness of information in this document. Copyright by Volkswagen AG.

Downloaded from www.Manualslib.com manuals search engine

2 Checking battery -A-

WARNING

Danger of injury! Observe warning notices and safety regulations ⇒ page 2 !

Caution

To prevent damage to battery -A- and vehicle, the following instructions relating to types of battery must be observed ⇒ page 1 .

2.1 Testing different battery types

2.1.1 Testing battery -A- with magic eye

WARNING

Danger of injury! Observe warning notices and safety regulations ⇒ page 2 !

Carry out checks in following sequence as follows:

1. Visual check ⇒ page 6
2. Test of colour display of “3-colour” magic eye ⇒ page 7 or “2-colour” magic eye ⇒ page 7

WARNING

Do not test or charge batteries -A- whose magic eye is “colourless/light yellow”. Do not slave/jump start the vehicle!

Danger of explosion when checking and charging or slave/jump starting

These batteries -A- must be replaced.

3. Battery load test with

- Battery tester with printer -VAS 5097 A- ⇒ page 9 .
- Battery tester with printer -VAS 6161- ⇒ page 13 .
- Midtronics -MCR340V- battery tester (only for USA/Canada) ⇒ page 19 .

4. Depending on the result of the battery load test, “carry out current draw test” ⇒ page 23 .

Downloaded from www.Manualslib.com manuals search engine

2.1.2 Test of absorbent glass mat (AGM battery)

> **WARNING**
>
> *Danger of injury! Observe warning notices and safety regulations ⇒ page 2 !*

Carry out checks in following sequence as follows:

1. Visual check ⇒ page 6 .
2. Battery load test with

- Battery tester with printer -VAS 5097 A- ⇒ page 9 .
- Battery tester with printer -VAS 6161- ⇒ page 13 .
- Midtronics -MCR340V- battery tester (only for USA/Canada) ⇒ page 19 .

3. Depending on the result of the battery load test, “carry out current draw test” ⇒ page 23 .

2.2 Visual check

> **WARNING**
>
> *Danger of injury! Observe warning notices and safety regulations ⇒ page 2 !*

It is essential to first check the external condition of the battery, the terminals of battery -A- and that battery is seated securely visually before performing more extensive tests.

> **Caution**
>
> - *Battery -A- will be damaged if it is not secured correctly.*
> - *Vibrations shorten the life of the battery, there is a danger of an explosion, the cell plates may be damaged and the clamping bracket may damage the battery housing.*
> - *Check battery -A- is securely seated and, if necessary, tighten securing bolt to specified torque.*

Points in the visual check

- Damage to housing of battery -A- . Electrolyte can leak out if the housing is damaged. If battery acid leaks out, serious damage to the vehicle could be caused. Treat areas of the vehicle affected by leaked battery acid immediately with acid neutraliser or a soap solution.
- Damage to battery terminals. The necessary contact at the terminal clamps cannot be guaranteed if the terminals are damaged. When connecting clamps to terminals, tighten clamps to torque specified in this workshop manual ⇒ Electrical system; Rep. Gr. 27 for respective vehicle. If the clamps are not correctly seated and tightened, the wiring could burn, which could result in electrical system malfunctions. Which will cause malfunctions in the electrical system. Therefore it can no longer be guaranteed that the vehicle will function correctly.

Copyright by Volkswagen AG. Volkswagen AG does not guarantee or accept any liability with respect to the correctness of information in this document. Copyright by Volkswagen AG. Protected by copyright. Copying for private or commercial purposes, in part or in whole, is not permitted unless authorised by Volkswagen AG.

Downloaded from www.Manualslib.com manuals search engine

2.3 Test of colour display of magic eye

2.3.1 Test of “3-colour” display (up to 03/08)

> **WARNING**
>
> *Danger of injury! Observe warning notices and safety regulations ⇒ page 2 !*

General information on magic eye

The magic eye provides information concerning the electrolyte level and the charge level of battery -A- .

Before carrying out a visual check, tap the magic eye lightly and carefully using the handle of a screwdriver. The air bubbles, which can influence the display, will dissipate when this is done. The colour display of the magic eye will be more accurate.

Note

- *Air bubbles can form below the magic eye particularly if the battery -A- has been recharged, even if the battery -A- was charged during normal vehicle operation. These falsify the colour displayed by the magic eye.*
- *Because the magic eye is located in only one cell, the display applies only to this cell. An exact determination of battery's condition is only possible through a load test ⇒ page 9 .*
- *The magic eye can be located at various positions on the battery -A- .*

Three different colour displays are possible

- “Green”: Battery -A- is charged sufficiently.
- “Black”: Battery -A- partly discharged, charge level less than 65 % or completely discharged.
- “Colourless/light yellow”: Battery -A- must be renewed.

> **WARNING**
>
> *Do not test or charge batteries -A- whose magic eye is “colourless/light yellow”. Do not slave/jump start the vehicle!*
>
> *Danger of explosion when checking and charging or slave/jump starting*
>
> *These batteries -A- must be replaced.*

2.3.2 Test of “2-colour” display (from 04/08 onwards)

> **WARNING**
>
> *Danger of injury! Observe warning notices and safety regulations ⇒ page 2 !*

Protected by copyright. Copying for private or commercial purposes, in part or in whole, is not permitted unless authorised by Volkswagen AG. Volkswagen AG does not guarantee or accept any liability with respect to the correctness of information in this document. Copyright by Volkswagen AG.

Downloaded from www.Manualslib.com manuals search engine

Copyright by Volkswagen AG. Volkswagen AG does not guarantee or accept any liability with respect to the correctness of information in this document. Copyright by Volkswagen AG. Reproduction, copy, publication or communication to third parties, in part or in full, is permitted only with the express consent of Volkswagen AG.

General information on magic eye

For newer batteries -A- from 03/08 onwards, there is no “green” colour display for charge level indication. The only remaining colours are “black” or “colourless/light yellow”.

The magic eye provides information concerning the electrolyte level of the battery -A- .

The charge level of the battery -A- can no longer be determined by means of the magic eye; a battery load test must be carried out for this ⇒ page 9 .

Before carrying out a visual check, tap the magic eye lightly and carefully using the handle of a screwdriver. The air bubbles, which can influence the display, will dissipate when this is done. The colour display of the magic eye will be more accurate.

Note

- *Air bubbles can form below the magic eye particularly if the battery -A- has been recharged, even if the battery -A- was charged during normal vehicle operation. These falsify the colour displayed by the magic eye.*
- *Because the magic eye is located in only one cell, the display applies only to this cell. An exact determination of battery's condition is only possible through a load test* *⇒ page 9* *.*
- *The magic eye can be located at various positions on the battery -A- .*

Three different colour displays are possible

- “Black”: Electrolyte level OK.
- “Colourless/light yellow”: Electrolyte level too low. The battery -A- must be renewed.

WARNING

Do not test or charge batteries -A- whose magic eye is “colourless/light yellow”. Do not slave/jump start the vehicle!

Danger of explosion when checking and charging or slave/jump starting

These batteries -A- must be replaced.

2.4 Battery tester with printer -VAS 5097 A-

WARNING

Danger of injury! Observe warning notices and safety regulations ***⇒ page 2*** ***!***

It is not necessary to remove or disconnect battery -A- when using battery tester with printer -VAS 5097 A- .

The battery tester with printer -VAS 5097 A- can be used to test/check the following batteries -A- :

- 80 to 499 A: Low-temperature test current according to DIN (Deutsche Industrie Norm (German Industrial Standard))[1)]
- 95 to 574 A: Low-temperature test current according to IEC (International Engineering Consortium)

Downloaded from www.Manualslib.com manuals search engine

- 136 to 855 A: Low-temperature test current according to EN/ SAE (European Norm/Standard of Automotive Engineers)

1) Batteries -A- with a low-temperature test current greater than 499 A according to DIN can be tested using setting for 499 A according to DIN.

For testing, batteries -A- are loaded with a current equivalent to the starting current of a passenger car. Under this load the battery -A- is tested and the result of the measurement is printed out.

Note

Observe ⇒ Instruction manual for battery tester with printer -VAS 5097 A- or sticker ⇒ Brief instructions for battery tester with printer -VAS 5097 A- on battery tester with printer -VAS 5097 A- and the table for low-temperature test current ⇒ page 11 .

- Description of battery tester with printer -VAS 5097 A- ⇒ page 9
- Battery load test ⇒ page 9 .
- Table: Low-temperature test current ⇒ page 11
- Results of battery load test ⇒ page 12 .
- Explanations of test printout ⇒ page 13
- Evaluation of test result ⇒ page 13 .

2.4.1 Description of battery tester with printer -VAS 5097 A-

Battery tester with printer -VAS 5097 A-

1 - Green LED “Unit operating”

2 - Red LED “Unit connected with reverse polarity”

3 - Red LED “Battery cannot be tested” Battery -A- has to be replaced.

4 - `Start` button

5 - Low-temperature current selection switch

6 - `ON/OFF` function switch

7 - Selection switch (pick-off point on battery -A- /on jump-start point)

8 - `Paper feed` button

9 - Printer

2.4.2 Battery load test

WARNING

Danger of injury! Observe warning notices and safety regulations ⇒ page 2 !

Special tools and workshop equipment required

Protected by copyright. Copyright by Volkswagen AG. Volkswagen AG does not guarantee or accept any liability with respect to the correctness of information in this document. Copyright by Volkswagen AG. Copying for private or commercial purposes, in part or in whole, is not permitted unless authorised by Volkswagen AG.

Downloaded from www.Manualslib.com manuals search engine

- Battery tester with printer -VAS 5097 A-

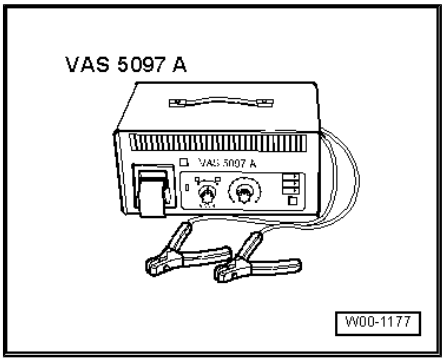

Note

Note technical solution ⇒ TS 2012182 for battery tester with printer -VAS 5097 A- .

Carry out following procedures:

WARNING

Do not test or charge batteries -A- whose magic eye is "colourless/light yellow". Do not slave/jump start the vehicle!

Danger of explosion when checking and charging or slave/jump starting

These batteries -A- must be replaced.

Note

The temperature of the battery -A- must be at least 10 °C.

– Switch off ignition and all electrical consumers.
– Check magic eye on batteries -A- with magic eye ⇒ page 5 .
– Switch on battery tester with printer -VAS 5097 A- ⇒ page 9 .
– Check low-temperature test current in amperes (A) according to DIN from details on battery -A- and refer to the table ⇒ page 11 to determine the setting range of battery tester with printer -VAS 5097 A- .

Note

If the battery -A- values are shown in IEC or EN/SAE units instead of DIN units, then convert figures using table or using table ⇒ page 11 on battery tester with printer -VAS 5097 A- .

– Select low-temperature test current via low-temperature test current selection switch ⇒ page 9 .
– Select measuring range (80 to 379 A or 380 to 499 A) with ON/OFF function switch ⇒ page 9 .

Protected by copyright. Copying for private or commercial purposes, in part or in whole, is not permitted unless authorised by Volkswagen AG. Volkswagen AG does not guarantee or accept any liability with respect to the correctness of information in this document. Copyright by Volkswagen AG.

Downloaded from www.Manualslib.com manuals search engine

Note

Batteries -A- with a low-temperature test current greater than 499 A according to DIN can be tested using setting for 499 A according to DIN.

– Connect red terminal clamp (+) to positive terminal of battery -A- .

– Connect black terminal clamp (-) to negative terminal of battery -A- .

Note

- *Ensure test clamps have a good contact!*
- *Note technical solution ⇒ TS 2012182 for battery tester with printer -VAS 5097 A- .*

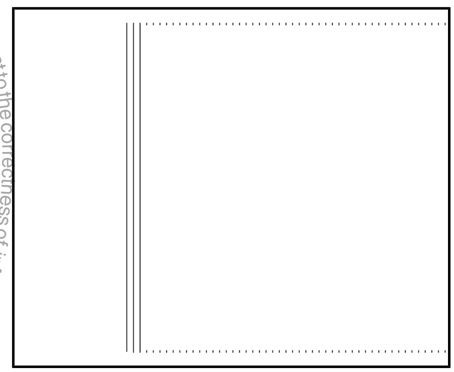

– Select point of connection of test terminals with selection switch ⇒ page 9 .

1 - Connected directly to battery -A- .

2 - Connection to jump start point

– Check that the low-temperature test current given on battery -A- is correct for the setting on battery tester with printer -VAS 5097 A- .

– Press `start test` button ⇒ page 9 .

The green LED lights up ⇒ page 9 . The test program runs through automatically. The test result is printed out by the printer ⇒ page 12 . If battery tester with printer -VAS 5097 A- does not start (LED does not light up, no printout), recharge battery -A- ⇒ page 26

– Switch off battery tester with printer -VAS 5097 A- ⇒ page 9 .

– Remove test terminals.

Note

- *The test is completed after about 20 seconds.*
- *The result of the test is printed out by the printer.*
- *Perform test once only. Repeating the test falsifies the results.*
- *The battery tester with printer -VAS 5097 A- needs approximately 30 minutes (to cool down) before it is ready for the next measurement.*

2.4.3 Table showing low-temperature test current

Low-temperature test current in A		
EN/ SAE	IEC	DIN
136 – 177	95 – 124	80 – 104
178 – 219	125 – 154	105 – 129
220 – 261	155 – 184	130 – 154
262 – 303	185 – 214	155 – 179
304 – 345	215 – 244	180 – 204

Protected by copyright. Copying for private or commercial purposes, in part or in whole, is not permitted unless authorised by Volkswagen AG. Volkswagen AG does not guarantee or accept any liability with respect to the correctness of information in this document. Copyright by Volkswagen AG.

Downloaded from www.Manualslib.com manuals search engine

Low-temperature test current in A		
EN/ SAE	IEC	DIN
346 – 387	245 – 274	204 – 229
388 – 429	275 – 304	230 – 254
430 – 471	305 – 334	255 – 279
472 – 513	335 – 364	280 – 304
514 – 555	365 – 394	305 –329
556 – 597	395 – 424	330 – 354
598 – 639	425 – 454	355 – 379
640 – 657	455 – 464	380 – 389
658 – 675	465 – 474	390 – 399
676 – 693	475 – 484	400 – 409
694 – 711	485 – 494	410 – 419
712 – 729	495 – 504	420 – 429
730 – 747	505 – 514	430 – 439
748 – 765	515 – 524	440 – 449
766 – 783	525 – 534	450 – 459
784 – 801	535 – 544	460 – 469
802 – 819	545 – 554	470 – 479
820 – 837	555 – 564	480 – 489
838 – 855	565 – 574	490 – 499[2)]

2) Batteries -A- with a low-temperature test current greater than 499 A according to DIN can be tested using setting for 499 A according to DIN.

2.4.4 Results of battery load test

Because of the high load on the battery -A- during this test, the battery voltage drops.

- If the battery -A- is OK, the voltage only drops to the minimum voltage.
- If the battery -A- is defective or has a low charge, the battery voltage quickly drops below the minimum voltage.
- After the test is completed, this low voltage value remains over a longer period, and the voltage increases very slowly again.
- Perform test once only. Repeating the test falsifies the results.
- The battery tester with printer -VAS 5097 A- requires approx. 30 minutes to cool down before carrying out another test or testing another battery -A- . This ensures that the results are not falsified.

Protected by copyright. Copying for private or commercial purposes, in part or in whole, is not permitted unless authorised by Volkswagen AG. Volkswagen AG does not guarantee or accept any liability with respect to the correctness of information in this document. Copyright by Volkswagen AG.

Downloaded from www.Manualslib.com manuals search engine

2.4.5 Explanations of test printout

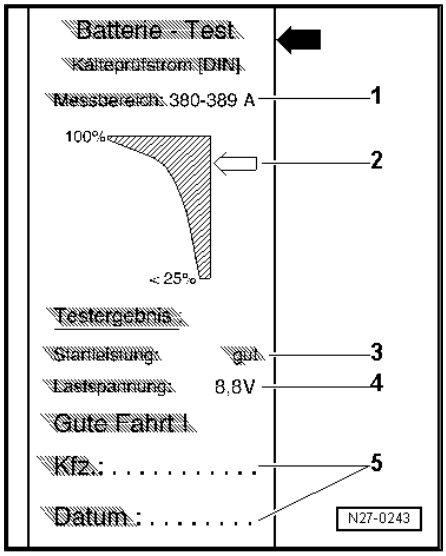

1 - Measuring range set on battery tester with printer -VAS 5097 A- .

2 - Diagram, -arrow- indicates condition of battery -A- .

3 - Test result

4 - Voltage that was applied to battery -A- during load test.

5 - Vehicle data and date. Must be completed by test personnel.

Note

- *The test printout is required for warranty claims.*
- *Perform test once only. Repeating the test falsifies the results.*

2.4.6 Evaluation of test result

Printout	Measures
Starting output very good	Battery -A- OK
Starting output good	Battery -A- OK
Starting output sufficient	Evaluation by current draw test ⇒ page 23
Starting output poor	Evaluation by current draw test ⇒ page 23
Starting output very poor	Evaluation by current draw test ⇒ page 23
Cannot be tested	– Charge battery -A- ⇒ page 26 and test it again.

2.5 Battery tester with printer -VAS 6161-

WARNING

Danger of injury! Observe warning notices and safety regulations ⇒ page 2 !

It is not necessary to remove or disconnect battery -A- when using battery tester with printer -VAS 6161- .

The battery tester with printer -VAS 6161- does not load the battery -A- any more. It works on the principle of dynamic conductance acquisition.

All types of battery are stored in the battery tester with printer -VAS 6161- .

Data can be stored on an SD card.

The battery tester with printer -VAS 6161- can be updated via an interface or an SD card, so that battery data from VW are always up to date.

Integrated infrared sensor (battery temperature measurement) improves measurement quality.

A 2D scanner is available as an option to read data directly from the bar code of the battery -A- .

Protected by copyright. Copyright for private or commercial purposes, in part or in whole, is not permitted unless authorised by Volkswagen AG. Volkswagen AG does not guarantee or accept any liability with respect to the correctness of information in this document. Copyright by Volkswagen AG.

Downloaded from www.Manualslib.com manuals search engine

Note

Observe the ⇒ operating manual of the battery tester with printer -VAS 6161- .

- Description of battery tester with printer -VAS 6161- ⇒ page 14
- Battery test ⇒ page 14 .
- Performing maintenance test ⇒ page 16 .
- Performing service test ⇒ page 17
- Performing warranty test ⇒ page 17
- Explanations of test printout ⇒ page 18
- Evaluation of test result ⇒ page 18 .

2.5.1 Description of battery tester with printer -VAS 6161-

Battery tester with printer -VAS 6161-

1 - Internal printer
2 - Operating lever for paper compartment
3 - Paper slot
4 - Display with main menu
5 - Control panel with ON/OFF button
6 - Connection for battery test cable
7 - Card slot for SD card
8 - Infrared sensor (temperature measurement)
9 - Data transmitter for PC

2.5.2 Battery test

WARNING

Danger of injury! Observe warning notices and safety regulations ⇒ page 2 !

Special tools and workshop equipment required

- Battery tester with printer -VAS 6161-

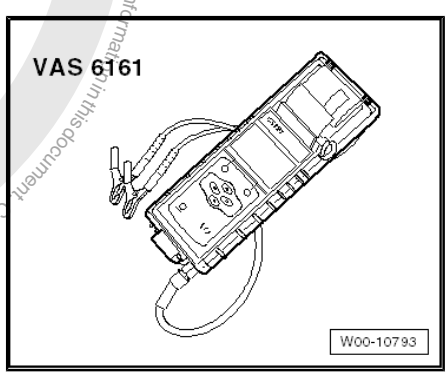

Protected by copyright. Copying for private or commercial purposes, in whole or in part, is not permitted unless authorised by Volkswagen AG. Volkswagen AG does not guarantee or accept any liability with respect to the correctness of information in this document. Copyright by Volkswagen AG.

Downloaded from www.Manualslib.com manuals search engine

Carry out following procedures:

WARNING

Do not test or charge batteries -A- whose magic eye is "colourless/light yellow". Do not slave/jump start the vehicle!

Danger of explosion when checking and charging or slave/jump starting

These batteries -A- must be replaced.

Note

The temperature of the battery -A- must be at least 10 °C.

– Switch off ignition and all electrical consumers.
– Check magic eye on batteries -A- with magic eye ⇒ page 5 .
– Switch on battery tester with printer -VAS 6161- ⇒ page 14 .
– Connect red terminal clamp (+) to positive terminal of battery -A- .
– Connect black terminal clamp (-) to negative terminal of battery -A- .

Note

Ensure test clamps have a good contact!

– Select one of the following functions.

♦ Maintenance test (only in new cars before registration, in stationary and stock maintenance programme) ⇒ page 16 .
♦ Service test ⇒ page 17 .
♦ Guarantee test ⇒ page 17 .

Note

♦ *The test is completed after about 10 seconds.*
♦ *The result of the test is printed out by the printer.*
♦ *The battery tester with printer -VAS 6161- requires no cooling phase before it is ready for the next measurement.*

– Switch off battery tester with printer -VAS 6161- ⇒ page 14 .
– Remove test terminals.

Protected by copyright. Copyright for private or commercial purposes, in part or in whole, is not permitted unless authorised by Volkswagen AG. Volkswagen AG does not guarantee or accept any liability with respect to the correctness of information in this document. Copyright by Volkswagen AG.

Downloaded from www.Manualslib.com manuals search engine

2.5.3 Performing maintenance test

WARNING

Do not test or charge batteries -A- whose magic eye is "colourless/light yellow". Do not slave/jump start the vehicle!

Danger of explosion when checking and charging or slave/jump starting

These batteries -A- must be replaced.

Special tools and workshop equipment required

- Battery tester with printer -VAS 6161-

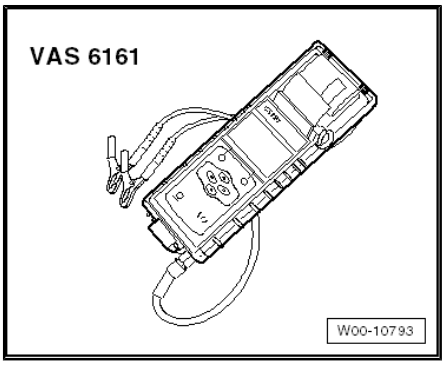

Carry out following procedures:

– Select "Maintenance test" in menu.

– Connect scanner.

Note

If no scanner is available, write vehicle identification number on test printout by hand.

– Scan vehicle identification number.

– Select "On battery terminal" or "On jump start point".

– Select vehicle type.

– Scan the barcode or select "Type and Manufacturer" manually from menu.

– Measure temperature above battery -A- . To do this, hold infrared sensor about 5 cm above one battery terminal until temperature stabilises.

– Start test.

– Print out test protocol.

Protected by copyright. Copying for private or commercial purposes, in part or in whole, is not permitted unless authorised by Volkswagen AG. Volkswagen AG does not guarantee or accept any liability with respect to the correctness of information in this document. Copyright by Volkswagen AG.

Downloaded from www.Manualslib.com manuals search engine

2.5.4 Performing service test

WARNING

Do not test or charge batteries -A- whose magic eye is "colourless/light yellow". Do not slave/jump start the vehicle!

Danger of explosion when checking and charging or slave/jump starting

These batteries -A- must be replaced.

Special tools and workshop equipment required

- Battery tester with printer -VAS 6161-

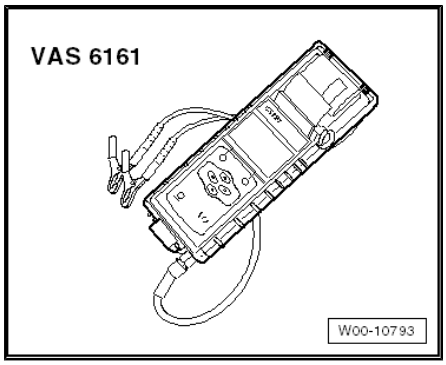

Carry out following procedures:

– Select "Service test" in menu.
– Select "On battery terminal" or "On jump start point".
– Select vehicle type.
– Measure temperature above battery -A- . To do this, hold infrared sensor about 5 cm above one battery terminal until temperature stabilises.
– Select battery type (Normal, AGM, 2*6 V or Gel).
– Select which standard to use (CCA, JIS, DIN, SAE, IEC or EN).
– Start test.
– Print out test protocol.

2.5.5 Perform guarantee test

WARNING

Do not test or charge batteries -A- whose magic eye is "colourless/light yellow". Do not slave/jump start the vehicle!

Danger of explosion when checking and charging or slave/jump starting

These batteries -A- must be replaced.

Special tools and workshop equipment required

Copyright by Volkswagen AG. Volkswagen AG does not guarantee or accept any liability with respect to the correctness of information in this document. Copying for private or commercial purposes, in part or in whole, is not permitted unless authorised by Volkswagen AG.
Protected by copyright.

Downloaded from www.Manualslib.com manuals search engine

♦ Battery tester with printer -VAS 6161-

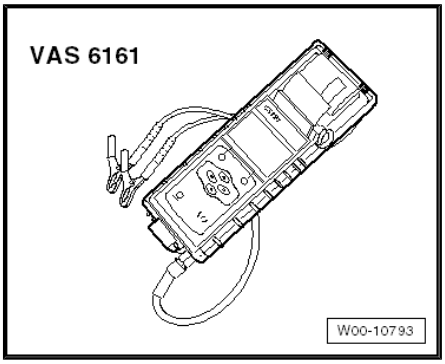

Protected by copyright. Copying for commercial purposes, in part or in whole, is not permitted unless authorised by Volkswagen AG. Volkswagen AG does not guarantee or accept any liability with respect to the correctness of information in this document. Copyright by Volkswagen AG.

Carry out following procedures:

– Select “Guarantee test” in menu.
– Select “In vehicle” or “Outside vehicle”.
– Select “On battery terminal” or “On jump start point”.
– Select vehicle type.
– Measure temperature above battery -A- . To do this, hold infrared sensor about 5 cm above one battery terminal until temperature stabilises.
– Select battery type (Normal, AGM, 2*6 V or Gel).
– Select battery capacity.
– Start test.
– Print out test protocol.

2.5.6 Explanations of test printout

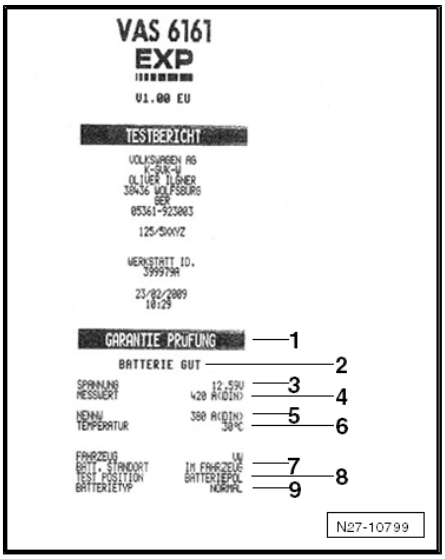

1 - Type of test
2 - Test result
3 - Measured voltage
4 - Measured cold start value of battery -A-
5 - Nominal cold-start value of battery -A- set on battery tester with printer -VAS 6161- .
6 - Measured temperature above battery -A-
7 - Installation location of battery -A-
8 - Position of battery terminal set on battery tester with printer -VAS 6161-
9 - Selected battery type

Note

The test printout is required for warranty claims.

2.5.7 Evaluation of test result

Evaluating battery test results for guarantee and service tests

Battery test results	Measures
Battery -A- OK	No measure carried out on battery -A- .

Downloaded from www.Manualslib.com manuals search engine

Battery test results	Measures
Battery -A- OK - Recharge.	– Charge battery -A- ⇒ page 26 and search for faults that are causing battery to become discharged.
Perform current draw test	– Perform a current draw test ⇒ page 23 . – Charge battery -A- ⇒ page 26 and test it again.
Replace battery -A-	– Disconnect battery -A- and test it again. The result “Renew battery” may be caused by a weak cable contact.
Battery cell defective - renew.	– Renew battery -A- ⇒ Electrical system; Rep. Gr. 27 .
Check connection.	– Connect test clamps directly to battery -A- , not to jump start point.

Evaluating battery test results for maintenance test

Battery test results	Measures
Battery -A- OK	No measures
Charge battery -A- immediately	– Charge battery -A- ⇒ page 26 .
Mark as defective.	– Mark battery -A- as “defective”.
Check tester connection.	– Disconnect battery -A- and test it again. The result “Check tester connection” may be caused by a weak test clamp contact.
Check connection.	– Connect test clamps directly to battery -A- , not to jump start point.
Noises	Wait until measured value appears on display.

2.6 Midtronics -MCR340V- battery tester (only for USA/Canada)

WARNING

Danger of injury! Observe warning notices and safety regulations ⇒ page 2 !

Note

Observe ⇒ Operating instructions for Midtronics -MCR340V- .

- Description of Midtronics -MCR340V- battery tester ⇒ page 20 .
- Battery test ⇒ page 20 .

Protected by copyright. Copying for private or commercial purposes, in whole or in part, is not permitted unless authorised by Volkswagen AG. Volkswagen AG does not guarantee or accept any liability with respect to the correctness of information in this document. Copyright by Volkswagen AG.

Downloaded from www.Manualslib.com manuals search engine

- Dealing with problems ⇒ page 22 .

2.6.1 Description of Midtronics -MCR340V- battery tester

Batteries -A- in VW vehicles are only allowed to be tested with battery testers approved by VW. In the USA/Canada, it is permissible to use the Midtronics -MCR340V- battery tester.

Read all the information about safety, setup and operation in the ⇒ operating instructions for the Midtronics -MCR340V- battery tester and follow the instructions to the letter.

Refer to ⇒ Self-study programme No. 234 ; Vehicle batteries for more information.

The following charging and analysis procedures apply to all batteries -A- , all battery installation locations (engine compartment or luggage compartment) and battery purposes (starter battery or second/convenience battery).

Always comply with the safety regulations, the regulations for setting up the Midtronics -MCR340V- battery tester, the display menu/display buttons, LEDs and the operating procedures described in the ⇒ operating manual of the Midtronics -MCR340V- battery tester.

Note

Observe and comply with all subsections, remarks and references relating to the vehicle and battery type to be tested.

2.6.2 Battery test

WARNING

Danger of injury! Observe warning notices and safety regulations ⇒ page 2 !

WARNING

Do not test or charge batteries -A- whose magic eye is "colourless/light yellow". Do not slave/jump start the vehicle!

Danger of explosion when checking and charging or slave/jump starting

These batteries -A- must be replaced.

Special tools and workshop equipment required

- Midtronics -MCR340V-

Requirements

– Read description of device ⇒ page 20 .

– Perform a visual check ⇒ page 6 .

– Open bonnet or covers for other installation location of battery -A- .

– Select battery type (Standard or AGM).

– Remove covers from positive and negative terminals of battery -A- .

Protected by copyright. Copyright by Volkswagen AG. Volkswagen AG does not guarantee or accept any liability with respect to the correctness of information in this document. Copyright by Volkswagen AG. Copying for private or commercial purposes, in part or in whole, is not permitted unless authorised by Volkswagen AG.

Downloaded from www.Manualslib.com manuals search engine

– Use wing covers or other kinds of cover before you start work in engine compartment or interior.

– Close all doors.

Note

- *The temperature of the battery -A- must be at least 10 °C.*
- *For additional information, refer to the ⇒ operating manual of the Midtronics -MCR340V- tester.*

Carry out following procedures:

WARNING

Do not test or charge batteries -A- whose magic eye is "colourless/light yellow". Do not slave/jump start the vehicle!

Danger of explosion when checking and charging or slave/jump starting

These batteries -A- must be replaced.

– Switch off ignition and all electrical consumers.

– Check magic eye on batteries -A- with magic eye ⇒ page 5 .

– Switch on Midtronics -MCR340V- battery tester ⇒ operating instructions for the Midtronics -MCR340V- battery tester.

– Connect red terminal clamp (+) to positive terminal of battery -A- .

– Connect black terminal clamp (-) to negative terminal of battery -A- .

Note

Ensure test clamps have a good contact!

– Select "In vehicle" or "Outside vehicle".

– Select "Warranty test".

Note

Use the print function of the Midtronics -MCR340- tester if the test results are required for handling warranty applications.

– Select battery type (Standard or AGM).

– Make a note of the DIN value of the battery -A- as shown on the battery sticker. If there is no DIN value on the sticker, make a note of the SAE value.

– Enter DIN value in Midtronics -MCR340- tester and perform battery test ⇒ Operating manual of Midtronics tester -MCR340V- .

– If you are using SAE value, open the "Miscellaneous" menu and change from "DIN" to "SAE" ⇒ Operating manual Midtronics tester -MCR340V- .

– Switch Midtronics -MCR340- tester off.

Volkswagen AG does not guarantee or accept any liability with respect to the correctness of information in this document. Copyright by Volkswagen AG.
Copying for private or commercial purposes, in part or in whole, is not permitted unless authorised by Volkswagen AG.

Downloaded from www.Manualslib.com manuals search engine

– Remove test terminals.

Note

Always use DIN value from battery sticker! Otherwise, test result will be falsified.

2.6.3 Evaluation of test result

Results of battery test

Battery test results	Measures
Battery -A- OK	None
Good - charge	– Charge battery -A- ⇒ page 26 .
Use Incharge	– Charge battery -A- ⇒ page 26 .
Replace battery -A-	– Renew battery -A- ⇒ Electrical system; Rep. Gr. 27 .
Battery cell defective	– Renew battery -A- ⇒ Electrical system; Rep. Gr. 27 .

2.6.4 Dealing with problems Midtronics -MCR340V-

Under certain circumstances, the display may show errors or messages depending on the status of the tester.

The most frequent display messages are listed below, together with suggested solutions.

For messages not listed here, please refer to ⇒ Operating manual Midtronics -MCR340V- .

Display message	Measures
No display	– Check whether test clamps of Midtronics -MCR340V- battery tester are firmly connected to battery terminals. – Check battery terminals are tightened according to regulations ⇒ Electrical system; Rep. Gr. 27 and do not have corrosion. – Charge battery -A- ⇒ page 26 .
System noise	– Switch off all electrical consumers. – Wait until all electrical loads monitored by onboard supply control unit -J519- have switched off. – Remove the ignition key. – Disconnect any suspicious, non-standard electrical equipment from onboard supply.

– Wait a few minutes and test again ⇒ page 20 .

Protected by copyright. Copying for private or commercial purposes, in part or in whole, is not permitted unless authorised by Volkswagen AG. Volkswagen AG does not guarantee or accept any liability with respect to the correctness of information in this document. Copyright by Volkswagen AG.

Downloaded from www.Manualslib.com manuals search engine

Note

If you have performed test at jump-start point and message does not disappear, perform test directly on battery -A- .

2.7 Current draw test

WARNING

Do not test or charge batteries -A- whose magic eye is "colourless/light yellow". Do not slave/jump start the vehicle!

Danger of explosion when checking and charging or slave/jump starting

These batteries -A- must be replaced.

Ensure that the correct charging mode is set on the charger so that the current draw test is not falsified.

- Battery charger -VAS 5095 A- ⇒ page 27 .
- Battery charger -VAS 5900- ⇒ page 31 .
- Battery charger -VAS 5903- ⇒ page 43 .

To quickly ascertain the condition of a discharged battery -A- , the current draw test whilst charging will help to ascertain the condition of a discharged battery -A- to establish whether the battery -A- must be replaced or fully recharged.

Note

For battery tester with printer -VAS 6161- , the current draw test must always be performed when the test result "Perform current draw test" appears on the display.

The current draw test must be carried out when the test result with battery tester with printer -VAS 5097 A- is as follows:

1 - Starting output sufficient

2 - Starting output poor

3 - Starting output very poor

4 - Cannot be tested – Charge battery -A- and repeat test

5 - Battery tester with printer -VAS 5097 A- does not switch on (no LED, no printout)

Depending on the test result ⇒ page 13 of the battery tester with printer -VAS 5097 A- , further procedures or tests may be required before a final decision can be made on the condition of the battery.

Performing a current draw test whilst charging a battery -A- will quickly establish whether a partly or fully discharged battery -A- ⇒ page 63 can be recharged to return it to a serviceable condition.

Test prerequisites

- Temperature of battery -A- must be at least 10 °C when the battery is being charged.
- The battery charger must be able to output at least 30 A of charge current as in the case of battery charger -VAS 5095 A- / battery charger -VAS 5900- / battery charger -VAS 5903- .

Protected by copyright. Copying for private or commercial purposes, in part or whole, is not permitted unless authorised by Volkswagen AG. Volkswagen AG does not guarantee or accept any liability with respect to the correctness of information in this document. Copyright by Volkswagen AG.

Downloaded from www.Manualslib.com manuals search engine

- The current draw on the battery -A- must be measured with a pick-up clamp (100 A pick-up clamp -VAS 5051B/7-) when battery charger -VAS 5095 A- is used for charging.
- Battery charger -VAS 5900- and battery charger -VAS 5903- display the current draw.

Carry out following procedures:

– Connect battery -A- to battery charger and start charging process.

– Measure charge current of battery -A- after 5 minutes.

Test result

The charge current must be more than 10 % of the nominal capacity 5 minutes after starting the charging sequence.

Example:

For a 60 Ah battery -A- , the charge current must the higher than 6 A five minutes after charging has been started.

– Fully charge battery -A- when the charge current is higher than 10 % of the nominal capacity.

– Perform battery load test after allowing battery -A- to rest for two hours ⇒ page 9 .

If charge current is below 10% of rated capacity five minutes after start of charging (example for a 60 Ah battery -A- : less than 6 A), renew battery -A- ⇒ Electrical system; Rep. Gr. 27 . For guarantee and ex-gratia cases, complete battery test sheet and keep it with battery -A- .

2.8 Checking no-load voltage of battery -A- (stock and stored vehicles)

WARNING

Danger of injury! Observe warning notices and safety regulations ⇒ page 2 !

Note

- *The no-load voltage test may only be carried out to assess the condition of the battery -A- on stock and stored vehicles within the framework of prescribed maintenance.*
- *The no-load test is used as a criterion for assessing whether a battery -A- on a stock or stored vehicle requires recharging ⇒ Maintenance tables "Service for stock and stored vehicles" .*

Special tools and workshop equipment required

Protected by copyright. Copying for private or commercial purposes, in part or in whole, is not permitted unless authorised by Volkswagen AG. Volkswagen AG does not guarantee or accept any liability with respect to the correctness of information in this document. Copyright by Volkswagen AG.

Downloaded from www.Manualslib.com manuals search engine

♦ Hand multimeter -V.A.G 1526 B-

Test conditions

The battery -A- must not have been charged or discharged within the last 2 days.

Carry out following procedures:

– Check no-load voltage of battery -A- with hand-held multimeter -V.A.G 1526 B- .

Test result

No-load voltage	Charge	Condition of battery -A-
11.60 V	0 %	Discharged, no capacity. Heavily discharged ⇒ page 63 .

Measured value	Measure to be performed
No-load voltage greater than or equal to 12.5 V	No-load voltage OK
No-load voltage less than 12.5 V	– Charge battery -A- ⇒ page 26

Protected by copyright. Copying for private or commercial purposes, in part or in whole, is not permitted unless authorised by Volkswagen AG. Copyright by Volkswagen AG. Volkswagen AG does not guarantee or accept any liability with respect to the correctness of information in this document.

Downloaded from www.Manualslib.com manuals search engine

3 Charging battery -A-

WARNING

Danger of injury! Observe warning notices and safety regulations ⇒ page 2 !

Caution

To prevent damage to battery -A- and vehicle, the following instructions relating to types of battery must be observed ⇒ page 1 .

WARNING

Do not test or charge batteries -A- whose magic eye is "colourless/light yellow". Do not slave/jump start the vehicle!

Danger of explosion when checking and charging or slave/jump starting

These batteries -A- must be replaced.

3.1 Battery charger -VAS 5095 A-

WARNING

Danger of injury! Observe warning notices and safety regulations ⇒ page 2 !

WARNING

Do not test or charge batteries -A- whose magic eye is "colourless/light yellow". Do not slave/jump start the vehicle!

Danger of explosion when checking and charging or slave/jump starting

These batteries -A- must be replaced.

Note

- *The effective charge current cannot be read on this battery charger -VAS 5095 A- . Charge current must be read externally using a pick-up clamp (100 A pick-up clamp -VAS 5051B/7-)*
- *Observe ⇒ Operating instructions for battery charger -VAS 5095 A- .*
- Description of battery charger -VAS 5095 A- ⇒ page 27 .
- Charge battery -A- ⇒ page 27 .
- Charging totally discharged battery -A- ⇒ page 28 .

Copyright by Volkswagen AG. Copying for commercial purposes, in part or in whole, is not permitted unless authorised by Volkswagen AG. Volkswagen AG does not guarantee or accept any liability with respect to the correctness of information in this document.

Downloaded from www.Manualslib.com manuals search engine

- Support mode ⇒ page 29 .
- Buffer mode/trickle charging ⇒ page 31

3.1.1 Description of battery charger -VAS 5095 A-

The battery charger -VAS 5095 A- is suitable for charging all 12V batteries -A- supplied by Volkswagen.

The battery charger charges without peaks in amperage or voltage. This will not adversely effect the onboard electronics. Battery -A- can remain in the vehicle while charging and do not have to be disconnected from the on-board supply.

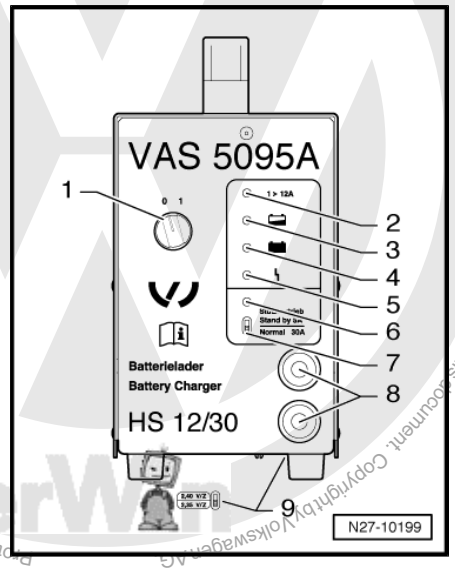

Battery charger -VAS 5095 A-

1 - ON/OFF switch (0 = OFF)

2 - Charging current indicator (I greater than 12 A)

3 - Charging current indicator, battery -A- partially charged (greater than 90 %)

4 - Trickle charging, lights up green when battery -A- is fully charged

5 - Malfunction indicator

6 - Support mode indicator

7 - Support mode/normal mode changer-over switch

8 - Charger cable: red terminal (+), black terminal (-)

9 - Battery type changeover switch (on floor of charger)

3.1.2 Charging battery -A-

> ⚠ **WARNING**
>
> *Danger of injury! Observe warning notices and safety regulations ⇒ page 2 !*

Special tools and workshop equipment required

- Battery charger -VAS 5095 A-

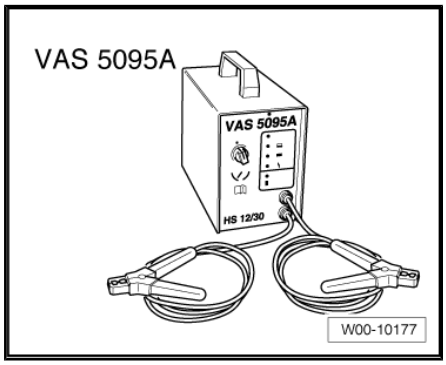

> ⚠ **Caution**
>
> *Always set battery type 2.4 V/C (volts/cell) when charging! This applies to all batteries -A- .*

Protected by copyright. Copying for private or commercial purposes, in part or in whole, is not permitted unless authorised by Volkswagen AG. Volkswagen AG does not guarantee or accept any liability with respect to the correctness of information in this document. Copyright by Volkswagen AG.

Downloaded from www.Manualslib.com manuals search engine

Note

The temperature of the battery -A- must be at least 10 °C.

WARNING

Do not test or charge batteries -A- whose magic eye is "colourless/light yellow". Do not slave/jump start the vehicle!

Danger of explosion when checking and charging or slave/jump starting

These batteries -A- must be replaced.

Carry out following procedures:

– Switch off ignition and all electrical consumers.

– Check setting for battery type on `battery type` switch ⇒ page 27 . `Battery type` switch must be set to 2.4 V/C (volts/cell).

– Connect red terminal clamp (+) to positive terminal of battery -A- .

Note

In vehicles with start/stop function and battery monitor control unit -J367- fitted, black terminal clamp (-) must be connected to body earth. Connecting it to negative terminal of battery -A- will cause start/stop system to malfunction.

– Connect black terminal clamp (-) to negative terminal of battery -A- /negative connection point.

– Switch on battery charger -VAS 5095 A- ⇒ page 27 .

The charging current indicators ⇒ page 27 -2- and -3- light up yellow. If only the yellow LED -3- lights up, battery -A- is partially charged (approx. 90%).

If the green LED ⇒ page 27 -4- lights up as well, the battery charger -VAS 5095 A- has switched to maintenance mode. The battery -A- is fully charged.

– Switch off battery charger -VAS 5095 A- ⇒ page 27 .

– Remove charger unit terminals from battery terminals.

3.1.3 Charging totally discharged battery -A-

WARNING

Danger of injury! Observe warning notices and safety regulations ⇒ page 2 !

The battery charger -VAS 5095 A- detects fully discharged batteries -A- automatically and starts the charging process gently with a low charging current. The charging current is automatically adapted to suit the charge condition of the battery.

Protected by copyright. Copying for private or commercial purposes, in part or in whole, is not permitted unless authorised by Volkswagen AG. Volkswagen AG does not guarantee or accept any liability with respect to the correctness of information in this document. Copyright by Volkswagen AG.

Downloaded from www.Manualslib.com manuals search engine

Note

- *Observe notes in chapter ⇒ page 63 .*
- *The battery voltage must be at least 0.6 V.*
- *Totally discharged batteries -A- in vehicles before registration must be exchanged prior to delivery. Preliminary damage cannot be excluded.*

WARNING

Do not test or charge batteries -A- whose magic eye is "colourless/light yellow". Do not slave/jump start the vehicle!

Danger of explosion when checking and charging or slave/jump starting

These batteries -A- must be replaced.

Carry out following procedures:

– Charge battery -A- ⇒ page 27 .

3.1.4 Support mode

General notes

The support mode provides the onboard supply with power when the battery -A- is removed or disconnected.

For additional information refer to ⇒ Operating instructions for battery charger -VAS 5095 A- .

The support mode is suitable in the following situations:

- Support mode of onboard supplies without installed battery -A-
- Power conservation when renewing the battery
- Ancillaries test without battery -A-

WARNING

Danger of injury! Observe warning notices and safety regulations ⇒ page 2 !

WARNING

Do not test or charge batteries -A- whose magic eye is "colourless/light yellow". Do not slave/jump start the vehicle!

Danger of explosion when checking and charging or slave/jump starting

These batteries -A- must be replaced.

Special tools and workshop equipment required

Copyright by Volkswagen AG. Volkswagen AG does not guarantee or accept any liability with respect to the correctness of information in this document. Copyright by Volkswagen AG. Copying for private or commercial purposes, in part or in whole, is not permitted unless authorised by Volkswagen AG.

Downloaded from www.Manualslib.com manuals search engine

- Battery charger -VAS 5095 A-

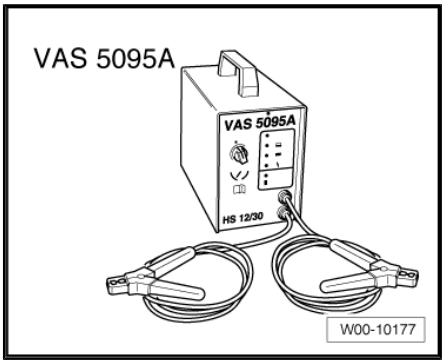

Carry out following procedures:

– Switch off ignition and all electrical loads.

Caution

- *The terminal polarity protection in operating mode "charging totally discharged batteries/support mode" is not active. Connect battery charger terminal clamps correctly to battery terminals.*
- *It can cause sparks through a short-circuit.*
- *Danger of explosion*
- *Ensure charger terminal clamps are seated securely.*

– Remove battery -A- ⇒ Electrical system; Rep. Gr. 27 .

Caution

When battery -A- is removed, ensure there is no contact between terminal clamp connected to positive clamp and body earth. Also ensure there is no contact between battery clamps.

– Connect red terminal clamp (+) to positive terminal of vehicle.

Note

In vehicles with start/stop function and battery monitor control unit -J367- fitted, black terminal clamp (-) must be connected to body earth. Connecting it to negative terminal of battery -A- will cause start/stop system to malfunction.

– Connect black terminal clamp (-) to negative terminal of vehicle.

– Check setting on `support mode/normal mode` changeover switch ⇒ page 27 . It must be switched on "support mode".

– Check polarity of charger unit cables.

– Switch on battery charger -VAS 5095 A- ⇒ page 27 .

The battery charger -VAS 5095 A- starts with support mode.

End battery support mode

– Switch off battery charger -VAS 5095 A- ⇒ page 27 .

– Remove charger unit terminals from battery terminals.

Copyright by Volkswagen AG. Volkswagen AG does not guarantee or accept any liability with respect to the correctness of information in this document. Copyright by Volkswagen AG. Volkswagen AG authorised by Volkswagen AG. Copying for private or commercial purposes, in part or in whole, is not permitted unless authorised by Volkswagen AG.

Downloaded from www.Manualslib.com manuals search engine

– Disconnect battery charger -VAS 5095 A- from mains.

3.1.5 Trickle charging

WARNING

Danger of injury! Observe warning notices and safety regulations ⇒ page 2 !

WARNING

Do not test or charge batteries -A- whose magic eye is "colourless/light yellow". Do not slave/jump start the vehicle!

Danger of explosion when checking and charging or slave/jump starting

These batteries -A- must be replaced.

In trickle charge mode, battery charger -VAS 5095 A- ensures that battery -A- is charged correctly and its charge is maintained.

Carry out following procedures:

– Proceed as for charging battery -A- ⇒ page 27 .

When battery -A- is being charged in trickle charge mode and a load draws current from battery, battery charger -VAS 5095 A- automatically compensates for charge.

The trickle charging mode can be continued for an unlimited period. Battery -A- is always ready for use.

3.2 Battery charger -VAS 5900-

WARNING

Danger of injury! Observe warning notices and safety regulations ⇒ page 2 !

WARNING

Do not test or charge batteries -A- whose magic eye is "colourless/light yellow". Do not slave/jump start the vehicle!

Danger of explosion when checking and charging or slave/jump starting

These batteries -A- must be replaced.

In this case of the battery charger -VAS 5900- , the effective charge current cannot be read directly on the battery charger -VAS 5900- .

Note

Observe ⇒ Operating instructions for battery charger -VAS 5900- .

♦ Description of battery charger -VAS 5900- ⇒ page 32 .

Protected by copyright. Copying for private or commercial purposes, in part or in whole, is not permitted unless authorised by Volkswagen AG. Volkswagen AG does not guarantee or accept any liability with respect to the correctness of information in this document. Copyright by Volkswagen AG.

Downloaded from www.Manualslib.com manuals search engine

- Charge battery -A- ⇒ page 32 .
- Service charging ⇒ page 34
- Charging totally discharged battery -A- ⇒ page 37 .
- Support mode ⇒ page 39 .
- Trickle charging ⇒ page 42 .

3.2.1 Description of battery charger -VAS 5900-

The battery charger -VAS 5900- is suitable for charging all 12V batteries -A- supplied by Volkswagen.

Battery charger -VAS 5900-

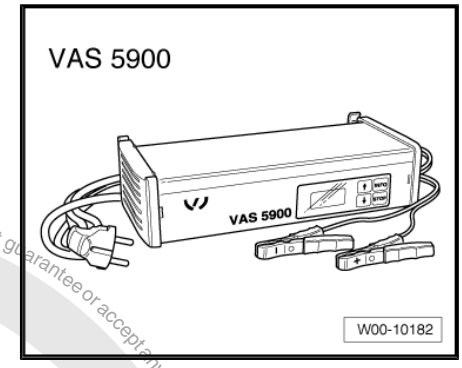

Overview of control panel

1 - Display

2 - ↑ "Up" button

3 - ↓ "Down" button

4 - START/STOP button

5 - INFO button

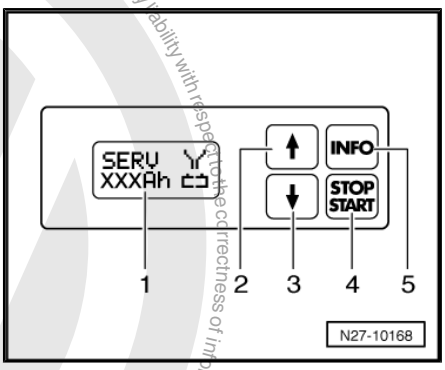

3.2.2 Charging battery -A-

WARNING

Danger of injury! Observe warning notices and safety regulations ⇒ page 2 !

WARNING

Do not test or charge batteries -A- whose magic eye is "colourless/light yellow". Do not slave/jump start the vehicle!

Danger of explosion when checking and charging or slave/jump starting

These batteries -A- must be replaced.

Special tools and workshop equipment required

Protected by copyright. Copyright by Volkswagen AG. Volkswagen AG does not guarantee or accept any liability with respect to the correctness of information in this document. Copyright by Volkswagen AG. Commercial purposes or in whole is not permitted unless authorised by Volkswagen AG.

Downloaded from www.Manualslib.com manuals search engine

♦ Battery charger -VAS 5900-

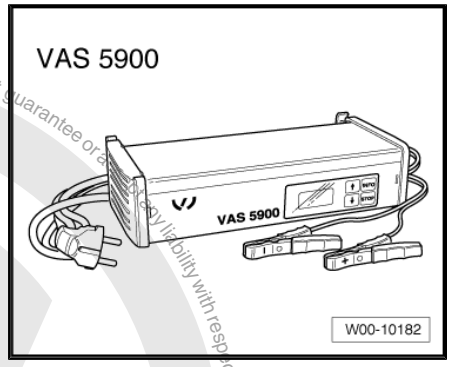

Protected by copyright. Copyright by Volkswagen AG. Volkswagen AG does not guarantee or assume any liability with respect to the correctness of information in this document. Copyright by Volkswagen AG. Volkswagen AG, in part or in whole, is not permitted unless authorised by Volkswagen AG.

Note

The temperature of the battery -A- must be at least 10 °C.

Carry out following procedures:

– Switch off ignition and all electrical loads.

– Connect battery charger -VAS 5900- to mains. The last selected operating mode will appear on display ⇒ page 32 .

– Set battery type with INFO button.

In the display, the symbol -1- for “standard charge for wet batteries” or symbol -2- for “standard charge for gel/absorbent glass mat batteries” will appear.

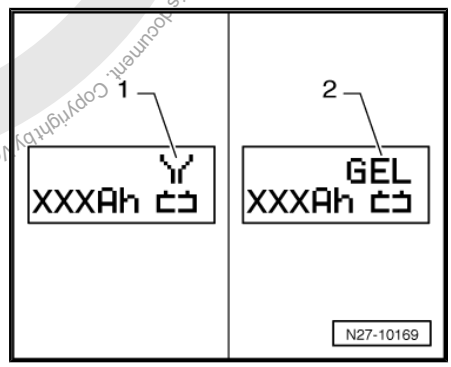

– Set battery capacity (Ah) of battery -A- for charging using respective ↑ button or ↓ button.

– Connect red terminal clamp (+) to positive terminal of battery -A- .

Note

In vehicles with start/stop function and battery monitor control unit -J367- fitted, black terminal clamp (-) must be connected to body earth. Connecting it to negative terminal of battery -A- will cause start/stop system to malfunction.

– Connect black terminal clamp (-) to negative terminal of battery -A- /negative connection point.

The battery charger -VAS 5900- recognises the voltage required for the connected battery -A- (6 V/12 V/24 V) and initiates the charging sequence automatically.

When the charge reaches about 80 - 85% the battery charger -VAS 5900- starts the “final charging”. The fourth bar appears in display -1-. The battery -A- is now ready for operation.

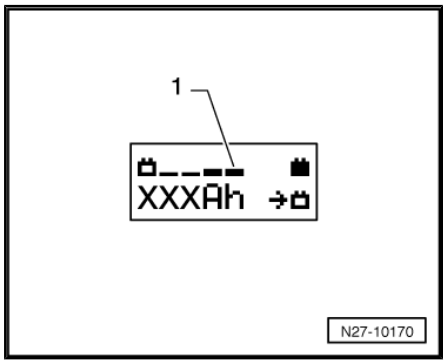

Downloaded from www.Manualslib.com manuals search engine

At a charge condition of 100 % all bars appear in display -1-.

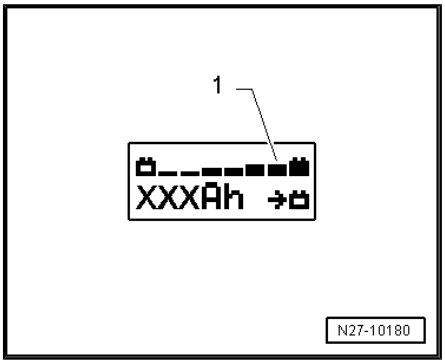

Note

- *In the "standard charge" the parallel use of loads while charging is possible. The charging period will be longer.*
- *Depending on battery type, battery charger -VAS 5900- switches over to trickle charging mode after approx. 1 to 7 hours. To fully charge battery, battery -A- should be connected to battery charger -VAS 5900- for this length of time.*

Possible faults and fault rectification

1 - Displayed battery voltage is not as per nominal voltage:

– Press respective [↑] button or [↓] button until charging sequence starts.

2 - Displayed battery voltage is not as per nominal voltage – charging sequence already started:

– Press [START / STOP] button twice.

– Press respective [↑] button or [↓] button until charging sequence starts again.

3 - Battery charger -VAS 5900- does not detect a battery -A- , when battery voltage is less than 2 V:

Display remains unchanged.

The battery type and ampere hours (Ah) as set is displayed.

Ending battery -A- charging process

– Press [START / STOP] button.

– Remove charger unit terminals from battery terminals.

– Disconnect battery charger -VAS 5900- from mains.

3.2.3 Service charging

WARNING

Danger of injury! Observe warning notices and safety regulations ⇒ page 2 !

Caution

The "service charging" mode is not permitted for VW vehicles as the voltage peaks will damage the onboard electronics.

If you nevertheless use "service charging", battery -A- must be disconnected from the onboard supply.

Protected by copyright. Copying for private or commercial purposes, in part or in whole, is not permitted unless authorised by Volkswagen AG. Volkswagen AG does not guarantee or accept any liability with respect to the correctness of information in this document. Copyright by Volkswagen AG.

Downloaded from www.Manualslib.com manuals search engine

WARNING

Do not test or charge batteries -A- whose magic eye is "colourless/light yellow". Do not slave/jump start the vehicle!

Danger of explosion when checking and charging or slave/jump starting

These batteries -A- must be replaced.

Caution

When charging, always set battery charger to the correct type of battery -A- ⇒ Operating instructions for battery charger -VAS 5900- !

The "service charging mode" is suitable for:

- *Wet batteries where the magic eye allows charging (magic eye black or green)*

The "service charging (SERV)" mode is only used for sulphated batteries -A- . The battery -A- is charged at voltages higher than 14.4 V. This can result in a partial reduction of the sulphated layer. After charging, always check the colour of the magic eye before using the battery -A- ⇒ page 7 .

Special tools and workshop equipment required

- Battery charger -VAS 5900-

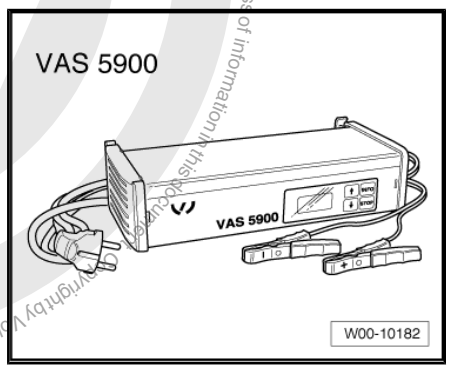

Note

The temperature of the battery -A- must be at least 10 °C.

Carry out following procedures:

– Switch off ignition and all electrical loads.

– Connect battery charger -VAS 5900- to mains. The last selected operating mode will appear on display ⇒ page 32 .

Protected by copyright. Copying for private or commercial purposes, in part or in whole, is not permitted unless authorised by Volkswagen AG. Volkswagen AG does not guarantee or accept any liability with respect to the correctness of information in this document. Copyright by Volkswagen AG.

Downloaded from www.Manualslib.com manuals search engine

– Set battery type with INFO button.

In the display, the symbol -1- for “service charging of wet batteries” or symbol -2- for “service charging of gel/absorbent glass mat batteries” will appear.

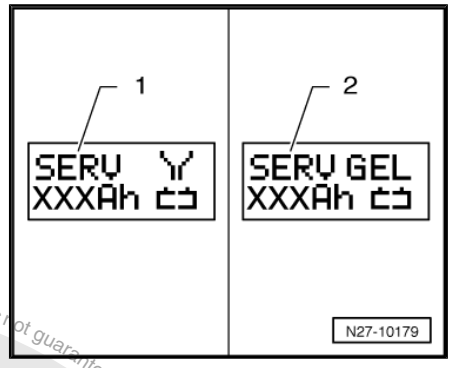

– Set battery capacity (Ah) of battery -A- for charging using respective ↑ button or ↓ button.

– Connect red terminal clamp (+) to positive terminal of battery -A- .

Note

In vehicles with start/stop function and battery monitor control unit -J367- fitted, black terminal clamp (-) must be connected to body earth. Connecting it to negative terminal of battery -A- will cause start/stop system to malfunction.

– Connect black terminal clamp (-) to negative terminal of battery -A- /negative connection point.

The battery charger -VAS 5900- recognises the voltage required for the connected battery -A- (6 V/12 V/24 V) and initiates the charging sequence automatically.

When the charge reaches about 80 to 85% of the battery voltage, the battery charger -VAS 5900- starts the “final charging”. The fourth bar appears in display -1-. The battery -A- is now ready for operation.

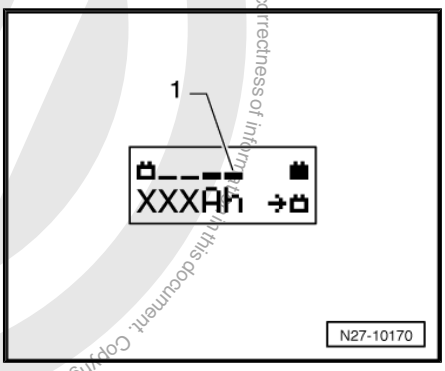

Note

The success of the “service charge” depends on the severity of the sulphation of the battery -A- .

Possible faults and fault rectification

1 - Displayed battery voltage is not as per nominal voltage:

– Press respective ↑ button or ↓ button until charging sequence starts.

2 - Displayed battery voltage is not as per nominal voltage – charging sequence already started:

– Press START / STOP button twice.

– Press respective ↑ button or ↓ button until charging sequence starts.

3 - Battery charger does not detect a battery -A- if battery voltage is less than 2 V:

Display remains unchanged.

The operating mode and ampere hours (Ah) as set are displayed.

Ending battery -A- charging process

– Press START / STOP button.

– Remove charger unit terminals from battery terminals.

– Disconnect battery charger -VAS 5900- from mains.

Protected by copyright. Copying for private or commercial purposes, in part or in whole, is not permitted unless authorised by Volkswagen AG. Volkswagen AG does not guarantee or accept any liability with respect to the correctness of information in this document. Copyright by Volkswagen AG.

Downloaded from www.Manualslib.com manuals search engine

3.2.4 Charging a totally discharged battery -A-

WARNING

Danger of injury! Observe warning notices and safety regulations ⇒ page 2 !

WARNING

Do not test or charge batteries -A- whose magic eye is "colourless/light yellow". Do not slave/jump start the vehicle!

Danger of explosion when checking and charging or slave/jump starting

These batteries -A- must be replaced.

Caution

- *The terminal polarity protection in operating mode "charging totally discharged batteries/support mode" is not active. Connect battery charger terminal clamps correctly to battery terminals.*
- *When charging, always set battery charger to the correct type of battery -A- ⇒ Operating instructions for battery charger -VAS 5900- !*
- *Totally discharged battery -A- is not recognised by battery charger -VAS 5900- ⇒ page 63 .*
- *Do not press* START / STOP *button when charger unit cables are connected incorrectly. This may damage the battery charger -VAS 5900- .*

Batteries -A- with a voltage of less than 2 V will not be recognised automatically by battery charger -VAS 5900- .

Special tools and workshop equipment required

- Battery charger -VAS 5900-

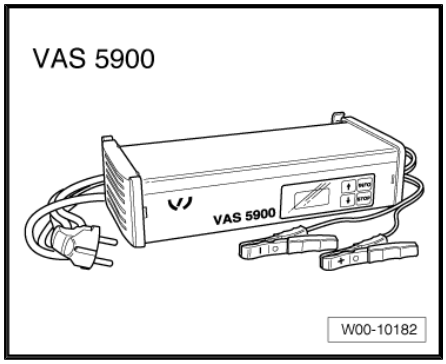

Volkswagen AG. Volkswagen AG does not guarantee or accept any liability with respect to the correctness of information in this document. Copyright by Volkswagen AG.

Downloaded from www.Manualslib.com manuals search engine

Note

- *Observe notes in chapter ⇒ page 63 .*
- *The temperature of the battery -A- must be at least 10 °C.*
- *Totally discharged batteries in vehicles before registration must be exchanged prior to delivery. Preliminary damage cannot be excluded.*

Carry out following procedures:

– Switch off ignition and all electrical loads.

– Connect battery charger -VAS 5900- to mains. The last selected operating mode will appear on display ⇒ page 32 .

Protected by copyright. Copying for private or commercial purposes, in part or in whole, is not permitted unless authorised by Volkswagen AG. Volkswagen AG does not guarantee or accept any liability with respect to the correctness of information in this document. Copyright by Volkswagen AG.

Downloaded from www.Manualslib.com manuals search engine

– Set battery type with INFO button.

In the display, the symbol -1- for “service charging of wet batteries” or symbol -2- for “service charging of gel/absorbent glass mat batteries” will appear.

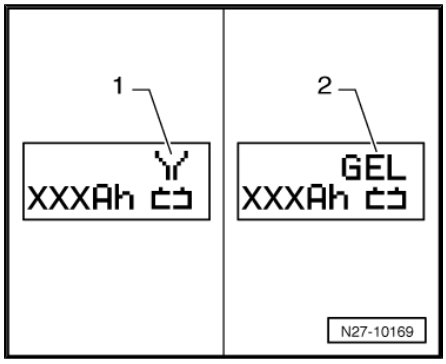

– Set battery capacity (Ah) of battery -A- for charging using respective ↑ button or ↓ button.

– Connect red terminal clamp (+) to positive terminal of battery -A- .

Note

In vehicles with start/stop function and battery monitor control unit -J367- fitted, black terminal clamp (-) must be connected to body earth. Connecting it to negative terminal of battery -A- will cause start/stop system to malfunction.

– Connect black terminal clamp (-) to negative terminal of battery -A- /negative connection point.

– Press START / STOP button for about 5 seconds. The menu “charging totally discharged batteries/support mode” will be activated.

– Press respective ↑ button or ↓ button to set corresponding battery voltage (6 V/12 V/24 V).

Note

If a button is not pressed within 5 seconds the battery charger -VAS 5900- will return to the main menu (select operating mode).

– Confirm selected battery voltage with START / STOP button.

Then follows the enquiry for "is charger cable terminal polarity correct".

– Check polarity of charger unit cables.

– Confirm polarity of charger unit cables with START / STOP button.

Battery charger -VAS 5900- will start charging sequence for totally discharged battery -A- .

Ending battery -A- charging process

– Press START / STOP button.

– Remove charger unit terminals from battery terminals.

– Disconnect battery charger -VAS 5900- from mains.

3.2.5 Support mode

General notes

The support mode provides the onboard supply with power when the battery -A- is removed or disconnected.

For additional information refer to ⇒ Operating instructions for battery charger -VAS 5900- .

The support mode is suitable in the following situations:

♦ Support mode of onboard supplies without installed battery -A-

Protected by copyright. Copying for private or commercial purposes, in part or in whole, is not permitted unless authorised by Volkswagen AG. Volkswagen AG does not guarantee or accept any liability with respect to the correctness of information in this document. Copyright by Volkswagen AG.

Downloaded from www.Manualslib.com manuals search engine

Protected by copyright. Copying for private or commercial purposes, in part or in whole, is not permitted unless authorised by Volkswagen AG. Volkswagen AG does not guarantee or accept any liability with respect to the correctness of information in this document. Copyright by Volkswagen AG.

- Power conservation when renewing the battery
- Ancillaries test without battery -A-

WARNING

Danger of injury! Observe warning notices and safety regulations ⇒ page 2 !

WARNING

Do not test or charge batteries -A- whose magic eye is "colourless/light yellow". Do not slave/jump start the vehicle!

Danger of explosion when checking and charging or slave/jump starting

These batteries -A- must be replaced.

Special tools and workshop equipment required

- Battery charger -VAS 5900-

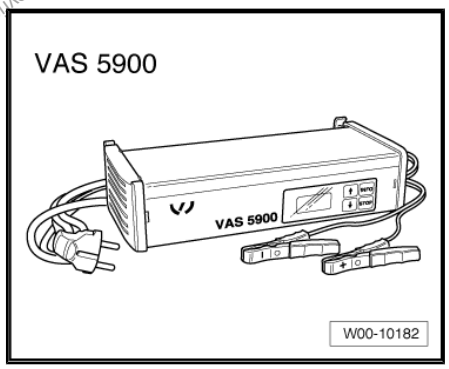

Carry out following procedures:

– Switch off ignition and all electrical loads.

Caution

- *The terminal polarity protection in operating mode "charging totally discharged batteries/support mode" is not active. Connect battery charger terminal clamps correctly to battery terminals.*
- *It can cause sparks through a short-circuit.*
- *Danger of explosion*
- *Do not press START / STOP button when charger unit cables are connected incorrectly. This may damage the battery charger -VAS 5900- .*

– Remove battery -A- ⇒ Electrical system; Rep. Gr. 27 .

– Connect battery charger -VAS 5900- to mains. The last selected operating mode will appear on display ⇒ page 32 .

Downloaded from www.Manualslib.com manuals search engine

Protected by copyright. Copying for private or commercial purposes, in part or in whole, is not permitted unless authorised by Volkswagen AG. Volkswagen AG does not guarantee or accept any liability with respect to the correctness of information in this document. Copyright by Volkswagen AG.

Caution

When battery -A- is removed, ensure there is no contact between terminal clamp connected to positive clamp and body earth. Also ensure there is no contact between battery clamps.

– Connect red terminal clamp (+) to positive terminal of battery -A- .

Note

In vehicles with start/stop function and battery monitor control unit -J367- fitted, black terminal clamp (-) must be connected to body earth. Connecting it to negative terminal of battery -A- will cause start/stop system to malfunction.

– Connect black terminal clamp (-) to negative terminal of battery -A- /negative connection point.

– Press START / STOP button for about 5 seconds. The menu “charging totally discharged batteries/support mode” will be activated.

– Press respective ↑ button or ↓ button to set corresponding battery voltage (6 V/12 V/24 V).

Note

If a button is not pressed within 5 seconds the battery charger -VAS 5900- will return to the main menu (select operating mode).

– Confirm selected battery voltage with START / STOP button.

Then follows the enquiry for "is charger cable terminal polarity correct".

– Check polarity of charger unit cables.

– Confirm polarity of charger unit cables with START / STOP button.

Battery charger -VAS 5900- starts with support mode of battery -A- .

End battery support mode

– Press START / STOP button.

– Remove charger unit terminals from battery terminals.

– Disconnect battery charger -VAS 5900- from mains.

Downloaded from www.Manualslib.com manuals search engine

3.2.6 Trickle charging

Note

- *When battery -A- is being charged in trickle charge mode and an electrical load draws current from battery, battery charger -VAS 5900- automatically compensates for charge.*
- *Trickle charge mode can be continued for an unlimited period.*
- *Battery -A- is always ready for use.*
- *Observe battery manufacture's maintenance instructions!*

WARNING

Danger of injury! Observe warning notices and safety regulations ⇒ page 2 !

WARNING

Do not test or charge batteries -A- whose magic eye is "colourless/light yellow". Do not slave/jump start the vehicle!

Danger of explosion when checking and charging or slave/jump starting

These batteries -A- must be replaced.

When battery -A- is fully charged battery charger -VAS 5900- switches to trickle charging mode.

Special tools and workshop equipment required

- Battery charger -VAS 5900-

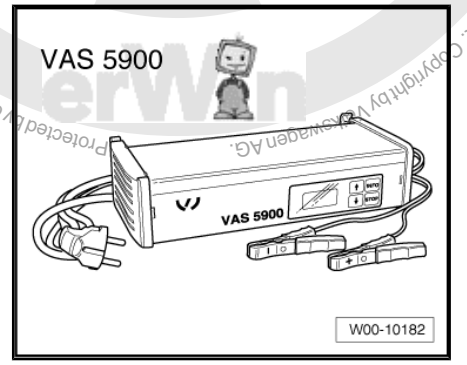

Carry out following procedures:

– Proceed as for charging battery -A- ⇒ page 32 .

Protected by copyright. Copying for private or commercial purposes, in part or in whole, is not permitted unless authorised by Volkswagen AG. Volkswagen AG does not guarantee or accept any liability with respect to the correctness of information in this document. Copyright by Volkswagen AG.

Downloaded from www.Manualslib.com manuals search engine

At a charge condition of 100 % all bars appear in display -1-.

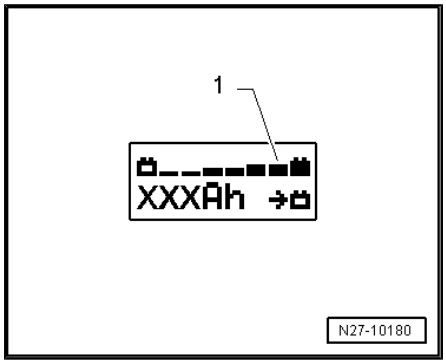

3.3 Battery charger -VAS 5903-

WARNING

Danger of injury! Observe warning notices and safety regulations ⇒ page 2 !

WARNING

Do not test or charge batteries -A- whose magic eye is "colourless/light yellow". Do not slave/jump start the vehicle!

Danger of explosion when checking and charging or slave/jump starting

These batteries -A- must be replaced.

Note

Observe ⇒ Operating instructions for battery charger -VAS 5903- .

- Description of battery charger -VAS 5903- ⇒ page 44 .
- Charge battery -A- ⇒ page 44 .
- Refresh charging ⇒ page 46 .
- Charging totally discharged battery -A- ⇒ page 49 .
- Support mode ⇒ page 51 .
- Trickle charging ⇒ page 54 .

Protected by copyright. Copying for private or commercial purposes, partly or in whole, is not permitted unless authorised by Volkswagen AG. Volkswagen AG does not guarantee or accept any liability with respect to the correctness of information in this document. Copyright by Volkswagen AG.

Downloaded from www.Manualslib.com manuals search engine

3.3.1 Description of battery charger -VAS 5903-

The battery charger -VAS 5903- is suitable for charging all 12V batteries -A- supplied by Volkswagen.

Battery charger -VAS 5903-

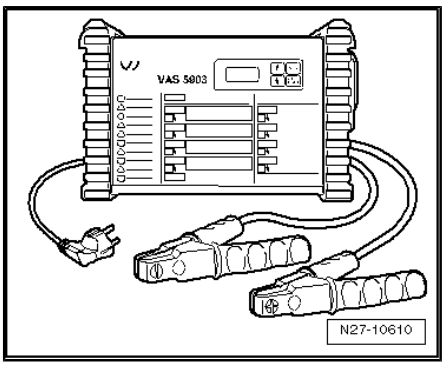

Overview of control panel

1 - Display

2 - ↑ “Up” button

3 - ↓ “Down” button

4 - START/STOP button

5 - INFO button

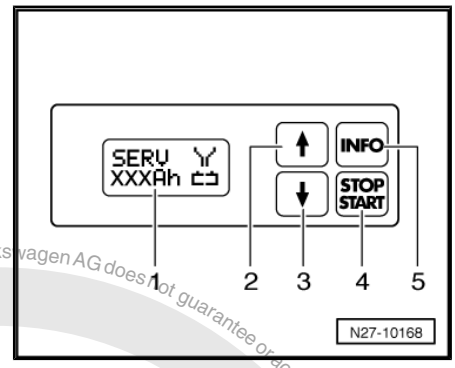

3.3.2 Charging battery -A-

> **WARNING**
>
> *Danger of injury! Observe warning notices and safety regulations ⇒ page 2 !*

> **WARNING**
>
> *Do not test or charge batteries -A- whose magic eye is “colourless/light yellow”. Do not slave/jump start the vehicle!*
>
> *Danger of explosion when checking and charging or slave/jump starting*
>
> *These batteries -A- must be replaced.*

Special tools and workshop equipment required

Protected by copyright. Copying for private or commercial purposes, in part or in whole, is not permitted unless authorised by Volkswagen AG. Volkswagen AG does not guarantee or accept any liability with respect to the correctness of information in this document. Copyright by Volkswagen AG.

Downloaded from www.Manualslib.com manuals search engine

♦ Battery charger -VAS 5903-

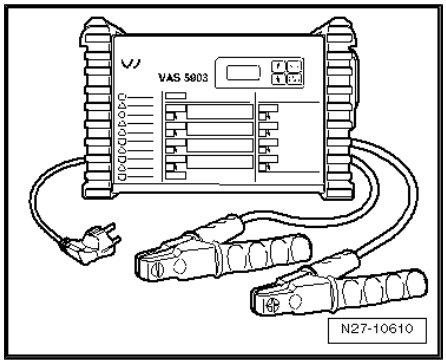

Note

The temperature of the battery -A- must be at least 10 °C.

Carry out following procedures:

– Switch off ignition and all electrical loads.

– Connect battery charger -VAS 5903- to mains. The last selected operating mode will appear on display ⇒ page 44 .

– Set battery type with INFO button.

In the display, the symbol -1- for “standard charge for wet batteries” or symbol -2- for “standard charge for gel/absorbent glass mat batteries” will appear.

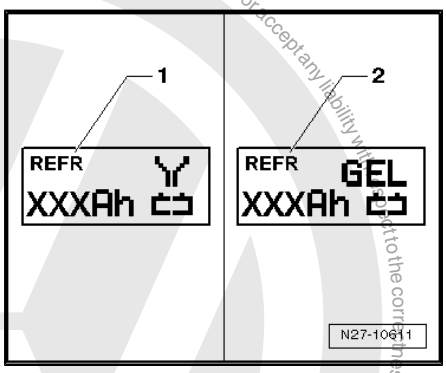

– Set battery capacity (Ah) of battery -A- for charging using respective ↑ button or ↓ button.

– Connect red terminal clamp (+) to positive terminal of battery -A- .

Note

In vehicles with start/stop function and battery monitor control unit -J367- fitted, black terminal clamp (-) must be connected to body earth. Connecting it to negative terminal of battery -A- will cause start/stop system to malfunction.

– Connect black terminal clamp (-) to negative terminal of battery -A- /negative connection point.

The battery charger -VAS 5903- recognises the voltage required for the connected battery -A- (6 V/12 V/24 V) and initiates the charging sequence automatically.

When the charge reaches about 80 - 85% the battery charger -VAS 5903- starts the “final charging”. The fourth bar appears in display -1-. The battery -A- is now ready for operation.

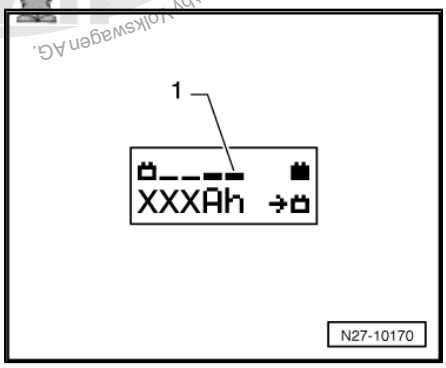

Volkswagen AG. Volkswagen AG does not guarantee or accept any liability with respect to the correctness of information in this document. Copyright by Volkswagen AG.

Downloaded from www.Manualslib.com manuals search engine

At a charge condition of 100 % all bars appear in display -1-.

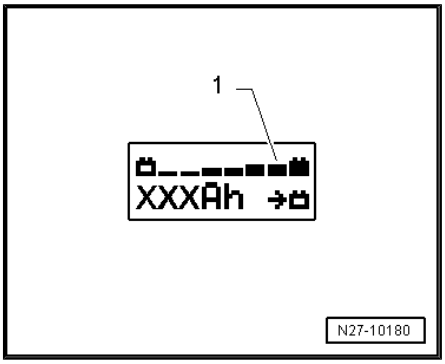

Note

- *In the battery type "standard charge" the parallel use of consumers while charging is possible. The charging period will be longer.*
- *Depending on battery type, battery charger -VAS 5903- switches over to trickle charging mode after approx. 1 to 7 hours. To fully charge battery, battery -A- should be connected to battery charger -VAS 5903- for this length of time.*

Possible faults and fault rectification

1 - Displayed battery voltage is not as per nominal voltage:

– Press respective ↑ button or ↓ button until charging sequence starts.

2 - Displayed battery voltage is not as per nominal voltage – charging sequence already started:

– Press START / STOP button twice.

– Press respective ↑ button or ↓ button until charging sequence starts again.

3 - Battery charger does not detect a battery -A- if battery voltage is less than 2 V:

Display remains unchanged.

The battery type and ampere hours (Ah) as set is displayed.

Ending battery -A- charging process

– Press START / STOP button.

– Remove charger unit terminals from battery terminals.

– Disconnect battery charger -VAS 5903- from mains.

3.3.3 Refresh charging

WARNING

Danger of injury! Observe warning notices and safety regulations ⇒ page 2 !

WARNING

Do not test or charge batteries -A- whose magic eye is "colourless/light yellow". Do not slave/jump start the vehicle!

Danger of explosion when checking and charging or slave/jump starting

These batteries -A- must be replaced.

Protected by copyright. Copying for private or commercial purposes, in part or in whole, is not permitted unless authorised by Volkswagen AG. Volkswagen AG does not guarantee or accept any liability with respect to the correctness of information in this document. Copyright by Volkswagen AG.

Downloaded from www.Manualslib.com manuals search engine

Caution

The "refresh charging" operating mode is not permitted for VW vehicles as the voltage peaks will damage the onboard electronics.

If you nevertheless use "refresh charging", the battery -A- must be disconnected from the onboard supply.

Caution

When charging, always set battery charger to the correct type of battery -A- ⇒ Operating instructions for battery charger -VAS 5903- !

"Refresh charge" is suitable for wet batteries which can be topped up with distilled water.

Do not use "refresh charge" operating mode with maintenance-free wet batteries.

The "refresh charging (Refr)" mode is only used for batteries -A- that are suspected of being defective (e.g. sulphation). The battery -A- is charged up to maximum electrolyte density and the plates are reactivated (reduction of sulphate layer).

Special tools and workshop equipment required

♦ Battery charger -VAS 5900-

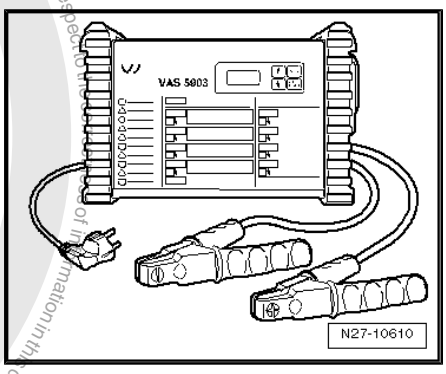

Note

The temperature of the battery -A- must be at least 10 °C.

Carry out following procedures:

– Switch off ignition and all electrical loads.

– Connect battery charger -VAS 5903- to mains. The last selected operating mode will appear on display ⇒ page 44 .

Protected by copyright. Copyright by Volkswagen AG. Volkswagen AG does not guarantee or accept any liability with respect to the correctness of information in this document. Copying for private or commercial purposes, in part or in whole, is not permitted unless authorised by Volkswagen AG.

Downloaded from www.Manualslib.com manuals search engine

– Set battery type with INFO button.

In the display the symbol -1- for “refresh charge for wet batteries” or symbol -2- for “refresh charge for gel/absorbent glass mat batteries” will appear.

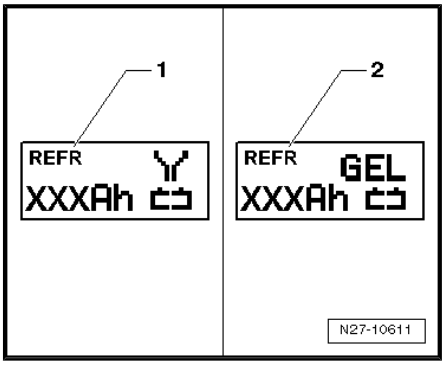

– Set battery capacity (Ah) of battery -A- for charging using respective ↑ button or ↓ button.

– Connect red terminal clamp (+) to positive terminal of battery -A- .

Note

In vehicles with start/stop function and battery monitor control unit -J367- fitted, black terminal clamp (-) must be connected to body earth. Connecting it to negative terminal of battery -A- will cause start/stop system to malfunction.

– Connect black terminal clamp (-) to negative terminal of battery -A- /negative connection point.

The battery charger -VAS 5900- recognises the voltage required for the connected battery -A- (6 V/12 V/24 V) and initiates the charging sequence automatically.

When the charge reaches about 80 to 85% of the battery voltage, the battery charger -VAS 5900- starts the “final charging”. The fourth bar appears in display -1-. The battery -A- is now ready for operation.

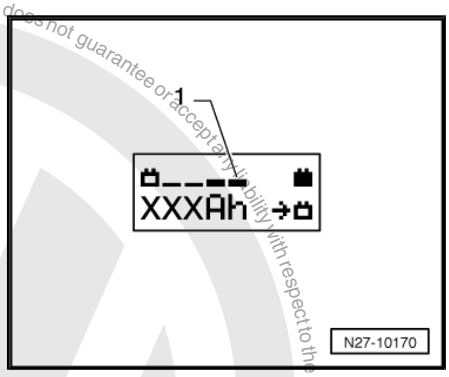

Note

The success of “refresh charging” depends on the severity of battery -A- sulphation.

Possible faults and fault rectification

1 - Displayed battery voltage is not as per nominal voltage:

– Press respective ↑ button or ↓ button until charging sequence starts.

2 - Displayed battery voltage is not as per nominal voltage – charging sequence already started:

– Press START / STOP button twice.

– Press respective ↑ button or ↓ button until charging sequence starts.

3 - Battery charger does not detect a battery -A- if battery voltage is less than 2 V:

Display remains unchanged.

The operating mode and ampere hours (Ah) as set are displayed.

Ending battery -A- charging process

– Press START / STOP button.

– Remove charger unit terminals from battery terminals.

– Disconnect battery charger -VAS 5903- from mains.

Protected by copyright. Copying for private or commercial purposes, in part or in whole, is not permitted unless authorised by Volkswagen AG. Volkswagen AG does not guarantee or accept any liability with respect to the correctness of information in this document. Copyright by Volkswagen AG.

Downloaded from www.Manualslib.com manuals search engine

3.3.4 Charging totally discharged battery -A-

WARNING

Danger of injury! Observe warning notices and safety regulations ⇒ page 2 !

WARNING

Do not test or charge batteries -A- whose magic eye is "colourless/light yellow". Do not slave/jump start the vehicle!

Danger of explosion when checking and charging or slave/jump starting

These batteries -A- must be replaced.

Caution

- *The terminal polarity protection in operating mode "charging totally discharged batteries/support mode" is not active. Connect battery charger terminal clamps correctly to battery terminals.*
- *When charging, always set battery charger to the correct type of battery -A- ⇒ Operating instructions for battery charger -VAS 5903- !*
- *Totally discharged battery -A- is not recognised by battery charger -VAS 5903- ⇒ page 63 .*
- *Do not press* START / STOP *button when charger unit cables are connected incorrectly. This may damage the battery charger -VAS 5903- .*

In the case of batteries -A- with a voltage less than 2 V, automatic recognition of the battery -A- by the battery charger -VAS 5903- will not be possible.

Special tools and workshop equipment required

- Battery charger -VAS 5903-

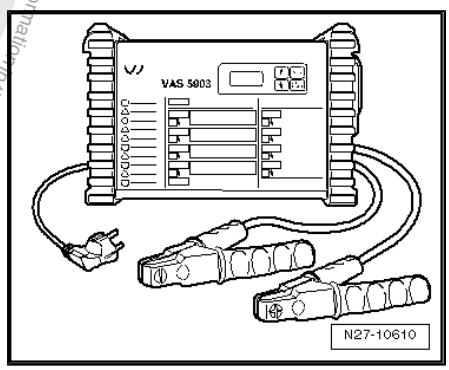

Protected by copyright. Copying for private or commercial purposes, in part or in whole, is not permitted unless authorised by Volkswagen AG. Volkswagen AG does not guarantee or accept any liability with respect to the correctness of information in this document. Copyright by Volkswagen AG.

Downloaded from www.Manualslib.com manuals search engine

Note

- *Observe notes in chapter ⇒ page 63 .*
- *The temperature of the battery -A- must be at least 10 °C.*
- *Totally discharged batteries in vehicles before registration must be exchanged prior to delivery. Preliminary damage cannot be excluded.*

Carry out following procedures:

– Switch off ignition and all electrical loads.

– Connect battery charger -VAS 5903- to mains. The last selected operating mode will appear on display ⇒ page 44 .

Protected by copyright. Copying for private or commercial purposes, in part or in whole, is not permitted unless authorised by Volkswagen AG. Volkswagen AG does not guarantee or accept any liability with respect to the correctness of information in this document. Copyright by Volkswagen AG.

Downloaded from www.Manualslib.com manuals search engine

– Set battery type with INFO button.

In the display the symbol -1- for “service charge for wet batteries” or symbol -2- for “service charge for gel/absorbent glass mat batteries” will appear.

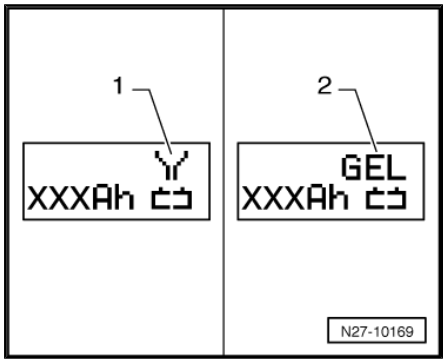

– Set battery capacity (Ah) of battery -A- for charging using respective ↑ button or ↓ button.

– Connect red terminal clamp (+) to positive terminal of battery -A- .

Note

In vehicles with start/stop function and battery monitor control unit -J367- fitted, black terminal clamp (-) must be connected to body earth. Connecting it to negative terminal of battery -A- will cause start/stop system to malfunction.

– Connect black terminal clamp (-) to negative terminal of battery -A- /negative connection point.

– Press START / STOP button for about 5 seconds. The menu “charging totally discharged batteries/support mode” will be activated.

– Press respective ↑ button or ↓ button to set corresponding battery voltage (6 V/12 V/24 V).

Note

If a button is not pressed within 5 seconds the battery charger -VAS 5903- will return to the main menu (select operating mode).

– Confirm selected battery voltage with START / STOP button.

Then follows the enquiry for "is charger cable terminal polarity correct".

– Check polarity of charger unit cables.

– Confirm polarity of charger unit cables with START / STOP button.

Battery charger -VAS 5903- will start charging sequence for totally discharged battery -A- .

Ending battery -A- charging process

– Press START / STOP button.

– Remove charger unit terminals from battery terminals.

– Disconnect battery charger -VAS 5903- from mains.

3.3.5 Support mode

General notes

The support mode provides the onboard supply with power when the battery -A- is removed or disconnected.

For additional information refer to ⇒ Operating instructions for battery charger -VAS 5903- .

The support mode is suitable in the following situations:

♦ Support mode of onboard supplies without installed battery -A-

Volkswagen AG. Volkswagen AG does not guarantee or accept any liability with respect to the correctness of information in this document. Copyright by Volkswagen AG.

Downloaded from www.Manualslib.com manuals search engine

- Power conservation when renewing the battery
- Ancillaries test without battery -A-

WARNING

Danger of injury! Observe warning notices and safety regulations ⇒ page 2 !

WARNING

Do not test or charge batteries -A- whose magic eye is "colourless/light yellow". Do not slave/jump start the vehicle!

Danger of explosion when checking and charging or slave/jump starting

These batteries -A- must be replaced.

Special tools and workshop equipment required

- Battery charger -VAS 5903-

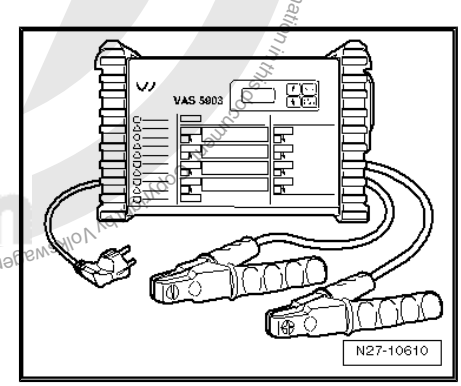

Carry out following procedures:

– Switch off ignition and all electrical loads.

Caution

- *The terminal polarity protection in operating mode "charging totally discharged batteries/support mode" is not active. Connect battery charger terminal clamps correctly to battery terminals.*
- *It can cause sparks through a short-circuit.*
- *Danger of explosion*
- *Ensure charger terminal clamps are seated securely.*
- *Do not press* START / STOP *button when charger unit cables are connected incorrectly. This may damage the battery charger -VAS 5903- .*

– Remove battery -A- ⇒ Electrical system; Rep. Gr. 27 .

– Connect battery charger -VAS 5903- to mains. The last selected operating mode will appear on display ⇒ page 44 .

Downloaded from www.Manualslib.com manuals search engine

Copyright by Volkswagen AG. Volkswagen AG does not guarantee or accept any liability with respect to the correctness of information in this document. Copyright by Volkswagen AG. Protected by copyright. Copying for private or commercial purposes, in part or in whole, is not permitted unless authorised by Volkswagen AG.

Caution

When battery -A- is removed, ensure there is no contact between terminal clamp connected to positive clamp and body earth. Also ensure there is no contact between battery clamps.

– Connect red terminal clamp (+) to positive terminal of battery -A- .

Note

In vehicles with start/stop function and battery monitor control unit -J367- fitted, black terminal clamp (-) must be connected to body earth. Connecting it to negative terminal of battery -A- will cause start/stop system to malfunction.

– Connect black terminal clamp (-) to negative terminal of battery -A- /negative connection point.

– Press START / STOP button for about 5 seconds. The menu “charging totally discharged batteries/support mode” will be activated.

– Press respective ↑ button or ↓ button to set corresponding battery voltage (6 V/12 V/24 V).

Note

If a button is not pressed within 5 seconds the battery charger -VAS 5903- will return to the main menu (select operating mode).

– Confirm selected battery voltage with START / STOP button.

Then follows the enquiry for "is charger cable terminal polarity correct".

– Check polarity of charger unit cables.

– Confirm polarity of charger unit cables with START / STOP button.

Battery charger -VAS 5903- starts with support mode of battery -A- .

End battery support mode

– Press START / STOP button.

– Remove charger unit terminals from battery terminals.

– Disconnect battery charger -VAS 5903- from mains.

Downloaded from www.Manualslib.com manuals search engine

3.3.6 Trickle charging

Note

- *When battery -A- is being charged in trickle charge mode and a load draws current from the battery, the battery charger -VAS 5903- automatically compensates for charge.*
- *Trickle charge mode can be continued for an unlimited period.*
- *Battery -A- is always ready for use.*
- *Observe battery manufacture's maintenance instructions!*

WARNING

Danger of injury! Observe warning notices and safety regulations ⇒ page 2 !

WARNING

Do not test or charge batteries -A- whose magic eye is "colourless/light yellow". Do not slave/jump start the vehicle!

Danger of explosion when checking and charging or slave/jump starting

These batteries -A- must be replaced.

Special tools and workshop equipment required

- Battery charger -VAS 5903-

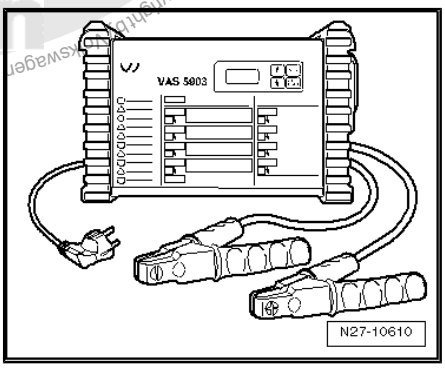

When battery -A- is fully charged battery charger -VAS 5903- switches to trickle charging mode.

Carry out following procedures:

– Proceed as for charging battery -A- ⇒ page 44 .

Downloaded from www.Manualslib.com manuals search engine

At a charge condition of 100 % all bars appear in display -1-.

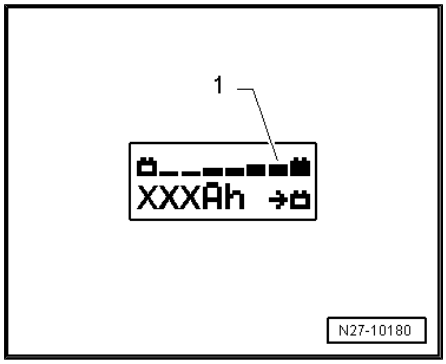

3.4 Battery charger -VAS 5906-

WARNING

Danger of injury! Observe warning notices and safety regulations ⇒ page 2 !

WARNING

Do not test or charge batteries -A- whose magic eye is "colourless/light yellow". Do not slave/jump start the vehicle!

Danger of explosion when checking and charging or slave/jump starting

These batteries -A- must be replaced.

Note

Observe ⇒ Operating instructions for battery charger -VAS 5906- .

- Description of battery charger -VAS 5906- ⇒ page 55 .
- Charge battery -A- ⇒ page 56 .

3.4.1 Description of battery charger -VAS 5906-

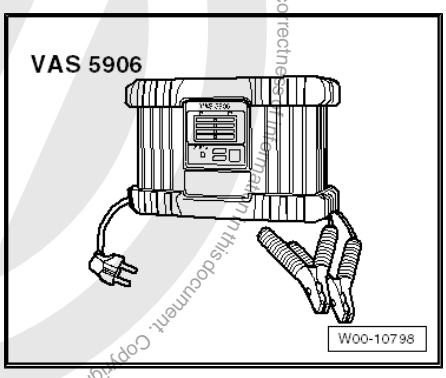

Battery charger -VAS 5906-

Battery charger -VAS 5906- has been specially developed for charging in vehicle onboard supply during vehicle presentation.

It has an automatic charging characteristic for starter batteries, 3 to 300 AH.

The maximum charging voltage 14.4 V is not exceeded. All electrical loads are supported by up to 30 A by the trickle charging.

For sustained operation, battery charger -VAS 5906- changes to trickle charging once battery -A- is fully charged.

The battery charger -VAS 5906- starts fully automatically and does not require any settings. All that is required is to connect terminal clamps and mains cable.

For additional information refer to ⇒ Operating instructions for battery charger -VAS 5906- .

Copyright by Volkswagen AG. Copying for private or commercial purposes, in part or in whole, is not permitted unless authorised by Volkswagen AG. Volkswagen AG does not guarantee or accept any liability with respect to the correctness of information in this document.

Downloaded from www.Manualslib.com manuals search engine

Overview of control panel

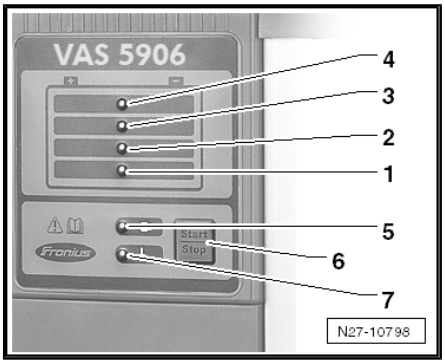

1 - Charge level display 25 %

2 - Charge level display 50 %

3 - Charge level display 75 %

4 - Charge level display 100 %

5 - Display ready

6 - Start/Stop button and Setup button for interrupting and resuming charging process. Used to enter the Setup menu and select type of characteristic (press for 10 s)

7 - Malfunction display.

3.4.2 Charging battery -A-

WARNING

Danger of injury! Observe warning notices and safety regulations ⇒ page 2 !

WARNING

Do not test or charge batteries -A- whose magic eye is "colourless/light yellow". Do not slave/jump start the vehicle!

Danger of explosion when checking and charging or slave/jump starting

These batteries -A- must be replaced.

Special tools and workshop equipment required

♦ Battery charger -VAS 5906-

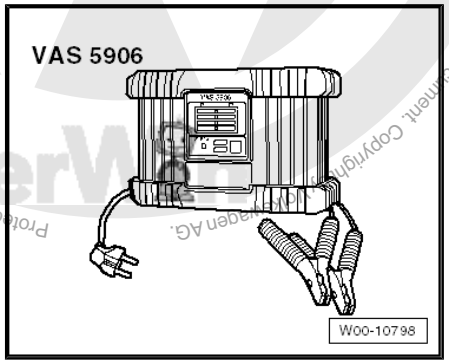

Carry out following procedures:

– Place battery charger -VAS 5906- in engine compartment or under the vehicle.

– Connect battery charger -VAS 5906- to mains.

Battery charger -VAS 5906- is in no-load operation - "ready" indicator is on.

Protected by copyright. Copyright for private or commercial purposes in part or in whole, is not permitted unless authorised by Volkswagen AG. Volkswagen AG does not guarantee or accept any liability with respect to the correctness of information in this document. Copyright by Volkswagen AG.

Downloaded from www.Manualslib.com manuals search engine

WARNING

Danger of injury! Observe warning notices and safety regulations ⇒ page 2 !

– Switch off ignition and all electrical consumers.
– Connect red terminal clamp (+) to positive terminal of battery -A- .

Note

In vehicles with start/stop function and battery monitor control unit -J367- fitted, black terminal clamp (-) must be connected to body earth. Connecting it to negative terminal of battery -A- will cause start/stop system to malfunction.

– Connect black terminal clamp (-) to negative terminal of battery -A- /negative connection point.

Charging starts after approximately 2 seconds.

Number of LEDs lit indicates charge level of battery -A- . Battery -A- has been charged up once all lights are lit.

When battery -A- is fully charged, battery charger -VAS 5906- automatically switches over to trickle charging.

Caution

Danger of sparking if charging terminals are removed too soon. Terminate charging by pressing `start/stop` *button.*

Ending battery -A- charging process

– Press `START / STOP` button.
– Remove charger unit terminals from battery terminals.
– Disconnect battery charger -VAS 5906- from mains.

3.5 Midtronics -INC 940- battery charger (only for USA/Canada)

WARNING

Danger of injury! Observe warning notices and safety regulations ⇒ page 2 !

WARNING

Do not test or charge batteries -A- whose magic eye is "colourless/light yellow". Do not slave/jump start the vehicle!

Danger of explosion when checking and charging or slave/jump starting

These batteries -A- must be replaced.

Protected by copyright. Copying for private or commercial purposes, in part or in whole, is not permitted unless authorised by Volkswagen AG. Volkswagen AG does not guarantee or accept any liability with respect to the correctness of information in this document. Copyright by Volkswagen AG.

Downloaded from www.Manualslib.com manuals search engine

Note

Observe ⇒ Operating instructions for Midtronics -INC 940- .

- Description of Midtronics -INC 940- battery tester ⇒ page 58 .
- Charge battery -A- ⇒ page 59 .
- Dealing with Midtronics -INC 940- problems ⇒ page 61 .

3.5.1 Description of Midtronics -INC 940- battery tester

Batteries -A- in VW vehicles are only allowed to be charged with battery chargers approved by VW. In the USA/Canada, it is permitted for the Midtronics -INC 940- battery charger to be used.

Midtronics -INC 940- battery charger combines battery charging with a charge condition checks and a battery test.

The following charging and analysis procedures apply to all batteries -A- , all battery installation locations (engine compartment or luggage compartment) and battery application purposes (starter battery or second/convenience battery).

– Always comply with the safety regulations, the regulations for setting up the Midtronics -INC 940- battery charger, the display menu/display buttons, LEDs and the operating procedures described in the ⇒ operating manual of the Midtronics -INC 940- battery charger.

– Read through the ⇒ Operating instructions for Midtronics -INC 940- carefully.

Refer to ⇒ Self-study programme No. 234 ; Vehicle batteries for more information.

WARNING

Danger of injury! Observe warning notices and safety regulations ⇒ page 2 !

WARNING

No naked flames, sparking or smoking in the vicinity of batteries -A- .

The Midtronics -INC 940- battery charger must be switched off before cables are connected or disconnected.

Do not remove cell plugs during charging.

Overcharging sulphated batteries -A- can lead to explosion.

Do not store precision tools in rooms where batteries are charged, because corrosion can ensue due to chemical reactions.

Protected by copyright. Copying for private or commercial purposes, in part or in whole, is not permitted unless authorised by Volkswagen AG. Volkswagen AG does not guarantee or accept any liability with respect to the correctness of information in this document. Copyright by Volkswagen AG.

Downloaded from www.Manualslib.com manuals search engine

> ⚠ WARNING
>
> *Do not test or charge batteries -A- whose magic eye is "colourless/light yellow". Do not slave/jump start the vehicle!*
>
> *Danger of explosion when checking and charging or slave/jump starting*
>
> *These batteries -A- must be replaced.*

3.5.2 Charging battery -A-

Requirements

> ⚠ WARNING
>
> *Do not test or charge batteries -A- whose magic eye is "colourless/light yellow". Do not slave/jump start the vehicle!*
>
> *Danger of explosion when checking and charging or slave/jump starting*
>
> *These batteries -A- must be replaced.*

Protected by copyright. Copying for private or commercial purposes, in part or in whole, is not permitted unless authorised by Volkswagen AG. Volkswagen AG does not guarantee or accept any liability with respect to the correctness of information in this document. Copyright by Volkswagen AG.

- Perform initial setup (dealership number/date/time) ⇒ Operating instructions for Midtronics -INC 940- .
- Check general information ⇒ page 58 .
- Perform visual check of battery -A- ⇒ page 6 .
- Determine whether battery type is "Standard" (wet battery) or "AGM" (absorbent glass mat battery).
- Close all vehicle doors.

Note

- *The temperature of the battery -A- must be at least 10 °C.*
- *For additional information, refer to the ⇒ operating manual of the Midtronics -INC 940- tester.*

Carry out following procedures:

– Switch off ignition and all electrical loads.

– Connect red terminal clamp (+) to positive terminal of battery -A- .

Note

In vehicles with start/stop function and battery monitor control unit -J367- fitted, black terminal clamp (-) must be connected to body earth. Connecting it to negative terminal of battery -A- will cause start/stop system to malfunction.

– Connect black terminal clamp (-) to negative terminal of battery -A- /negative connection point.

– Connect Midtronics -INC 940- battery charger to mains.

– Set `ON/OFF` switch of Midtronics -INC 940- battery charger to "ON"

Downloaded from www.Manualslib.com manuals search engine

– Select charge mode (Automatic or Manual).
– Select test (In vehicle or Outside vehicle).
– Select battery type (Standard or AGM).
– Select test type (Guarantee or other). Note additional details (depending on type of test).

Note

- *For additional information, refer to the ⇒ operating manual of the Midtronics -INC 940- tester.*
- *If necessary, make a note of menu items required for "Warranty" test type ⇒ Warranty service circular .*

Midtronics -INC 940- battery charger tests battery -A- and starts charging process. Display then shows one of three results, as well as approximate charging time.

Result	Measures
Battery -A- OK	Battery -A- can be used again.
Charging required	♦ Test found low charge level. ♦ Charging starts and approximate charging duration is displayed. ♦ Achieved cold-start performance and remaining charging time are displayed, and are updated regularly.
Replace battery -A-	Battery -A- defective. Charging procedure is interrupted. – Renew battery -A- ⇒ Electrical system; Rep. Gr. 27 .

Note

If Midtronics -INC 940- shows fault messages or text displays other than those listed above, please refer to ⇒ page 61 .

WARNING

Stop charging if battery -A- is generating a lot of gas. Press Stop button on front.

When charging and testing procedure has finished, Midtronics -INC 940- battery charger displays "Battery good" or "Replace battery" and total charging time.

There are three possible messages depending on individual circumstance (printout for warranty, repair job, evaluation and filing):

- Generate test code (only possible after automatic charging and test)
- Print last test result (for warranty)
- Display last test results

Protected by copyright. Copying for private or commercial purposes, in part or whole, is not permitted unless authorised by Volkswagen AG. Volkswagen AG does not guarantee or accept any liability with respect to the correctness of information in this document. Copyright by Volkswagen AG.

Downloaded from www.Manualslib.com manuals search engine

Protected by copyright. Copying for private or commercial purposes, in part or in whole, is not permitted unless authorised by Volkswagen AG. Volkswagen AG does not guarantee or accept any liability with respect to the correctness of information in this document. Copyright by Volkswagen AG.

Note

For additional information, refer to the ⇒ operating manual of the Midtronics -INC 940- tester.

Ending battery -A- charging process

– Remove charger unit terminals from battery terminals.

– Disconnect Midtronics -INC 940- battery charger from mains.

3.5.3 Dealing with problems

Under certain circumstances, the display may show errors or messages depending on the status of the tester.

The most frequent display messages are listed below, together with suggested solutions.

Note

For messages not listed here, please refer to ⇒ Operating manual Midtronics -INC 940- .

Display message	Measures
Check connection.	– Check whether terminal clamps of Midtronics -INC 940- battery tester are firmly connected to battery terminals. – Check whether battery terminals are tightened according to regulations and do not have corrosion.
Terminals connected?	Safety function of Midtronics -INC 940- charger. – Connect terminal clamps to battery -A- before starting charging procedure.
System noise	– Switch off all electrical loads. – Wait until all electrical loads monitored by onboard supply control unit -J519- have switched off. – Remove the ignition key. – Disconnect any suspicious, non-standard electrical equipment from onboard supply.

– Wait a few minutes and charge again ⇒ page 59 .

Downloaded from www.Manualslib.com manuals search engine

3.6 Solar panel -VAS 6102 A-

3.6.1 Description of solar panel -VAS 6102 A-

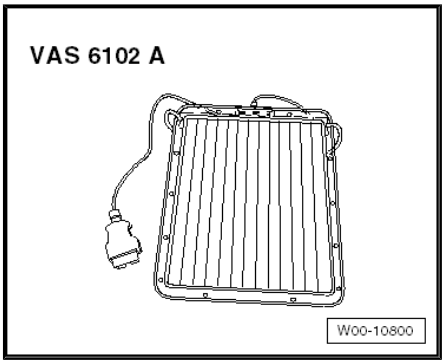

Solar panel -VAS 6102 A-

Solar panel -VAS 6102 A- supports onboard supply and prevents spontaneous discharging of battery -A- .

Solar panel -VAS 6102 A- achieves max. voltage of 14.3 V and a maximum charging current of 255 mA.

Use of the solar panel -VAS 6102 A- is permissible for charging all rechargeable lead or lead-gel batteries.

Solar panel -VAS 6102 A- is connected to diagnostic connection in vehicle.

A green LED is integrated in the frame of the solar panel -VAS 6102 A- to indicate that the panel is functioning. The brighter the LED is, the higher is the charging current.

The integrated electronics prevent battery -A- overcharging.

The solar panel -VAS 6102 A- is attached to the interior mirror -1-. The underside rests on the dash panel -2-.

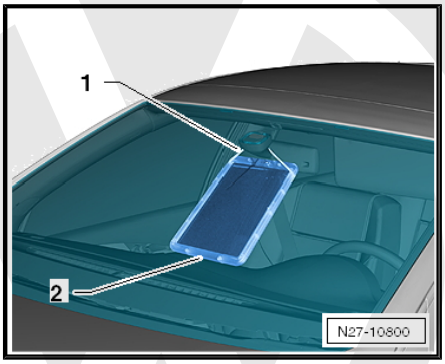

Note

Solar panel -VAS 6102 A- is not allowed to lie fully on dash panel. It is only allowed to be placed on dash panel with the bottom edge for support. Placing it fully on the surface can result in discolouration of the dash panel.

3.6.2 Trickle charging

Special tools and workshop equipment required

- Solar panel -VAS 6102 A-

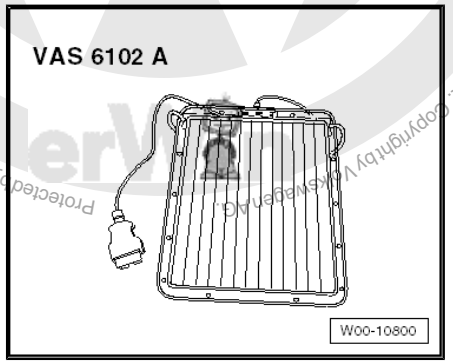

Protected by copyright. Copying for private or commercial purposes, in part or whole, is not permitted unless authorised by Volkswagen AG. Volkswagen AG does not guarantee or accept any liability with respect to the correctness of information in this document. Copyright by Volkswagen AG.

Downloaded from www.Manualslib.com manuals search engine

Carry out following procedures:

– Attach the solar panel -VAS 6102 A- to the interior mirror -1-.

– Position the solar panel with the underside resting on the dash panel -2-.

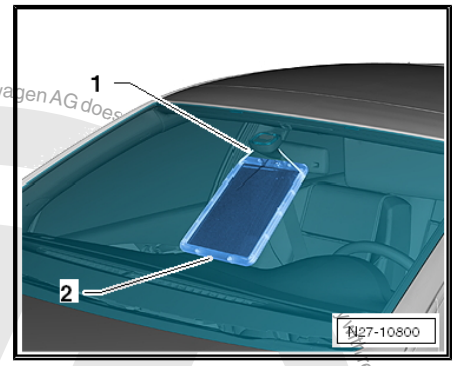

Note

Solar panel -VAS 6102 A- is not allowed to lie fully on dash panel. It is only allowed to be placed on dash panel with the bottom edge for support. Placing it fully on the surface can result in discolouration of the dash panel.

– Pull the fastening wire together until the solar panel -VAS 6102 A- is close to the windscreen.

– Plug the connector of the solar panel -VAS 6102 A- into the diagnostic connection of the vehicle. The panel is connected in the same way as the vehicle diagnostic, testing and information system -VAS 5051B- ⇒ page 82 .

– Test the solar panel -VAS 6102 A- to make sure it is functioning correctly. The green LED must light up.

3.7 Totally discharged batteries -A-

WARNING

Danger of injury! Observe warning notices and safety regulations ⇒ page 2 !

A battery -A- is designated “totally discharged” if the no-load voltage is less than 11.6 V.

WARNING

Do not test or charge batteries -A- whose magic eye is “colourless/light yellow”. Do not slave/jump start the vehicle!

Danger of explosion when checking and charging or slave/jump starting

These batteries -A- must be replaced.

Caution

- *Totally discharged batteries -A- freeze prematurely.*
- *Frozen batteries -A- must no longer be used.*

Protected by copyright. Copying for private or commercial purposes, in part or in whole, is not permitted unless authorised by Volkswagen AG. Volkswagen AG does not guarantee or accept any liability with respect to the correctness of information in this document. Copyright by Volkswagen AG.

Downloaded from www.Manualslib.com manuals search engine

Note

- *Batteries -A- that have not been used for a long time (vehicles that have been stored) self-discharge.*
- *In totally discharged batteries -A- , the electrolyte is comprised almost entirely of water because the acid content is so low.*
- *Totally discharged batteries -A- sulphate, that is, the entire plate surfaces of the batteries -A- harden.*
- *If a battery -A- is recharged shortly after it has totally lost its charge, the sulphation will dissipate.*
- *If these batteries -A- are not recharged, the plates continue to harden and the ability to recharge is reduced. The result of which is a reduction in the battery output.*
- *Totally discharged batteries -A- in vehicles before registration must be exchanged prior to delivery. Preliminary damage cannot be excluded.*

Carry out following procedures:

– Check no-load voltage of battery -A- ⇒ page 26 .

– Charge battery -A- .

- Charging battery -A- with battery charger -VAS 5095 A- ⇒ page 28 .
- Charging battery -A- with battery charger -VAS 5900- ⇒ page 37 .
- Charging battery -A- with battery charger -VAS 5903- ⇒ page 49 .
- Charging battery -A- with battery charger -VAS 5906- ⇒ page 56 .
- Charging battery -A- with Midtronics -INC 940- battery charger ⇒ page 59 .

Protected by copyright. Copying for private or commercial purposes, in part or in whole, is not permitted unless authorised by Volkswagen AG. Volkswagen AG does not guarantee or accept any liability with respect to the correctness of information in this document. Copyright by Volkswagen AG.

Downloaded from www.Manualslib.com manuals search engine

4 Cruise control system (CCS)

General description

The functions of the cruise control system are controlled by engine control unit -J623- .

Activating and deactivating cruise control system (CCS) ⇒ page 65 .

Fault detection and fault display

Faults relating to the cruise control system are output by way of the engine control unit -J623- .

For fault finding ⇒ Vehicle diagnosis, testing and information system VAS 5051 use “Guided fault finding” function.

4.1 Activating and deactivating cruise control system (CCS)

Carry out following procedures:

– Connect vehicle diagnostic, testing and information system -VAS 5051B- ⇒ page 82 .

– Select “guided fault finding” in the vehicle diagnostic, testing and information system -VAS 5051B- .

– Using “GoTo” button, select “Functions/component” and the following menu options in succession:

- Drive
- Engine code
- 01 - On Board Diagnostic capable systems
- Engine control or direct diesel injection and pre-glow system
- Functions
- Activating and deactivating cruise control system (CCS)

Protected by copyright. Copyright for private or commercial purposes, in part or in whole, is not permitted unless authorised by Volkswagen AG. Volkswagen AG does not guarantee or accept any liability with respect to the correctness of information in this document. Copyright by Volkswagen AG.

Downloaded from www.Manualslib.com manuals search engine

90 – Gauges, instruments

Protected by copyright. Copying for private or commercial purposes, in part or in whole, is not permitted unless authorised by Volkswagen AG. Volkswagen AG does not guarantee or accept any liability with respect to the correctness of information in this document. Copyright by Volkswagen AG.

Downloaded from www.Manualslib.com manuals search engine

92 – Windscreen wash/wipe system

1 Washer fluid line hose couplings

The following hose coupling types are used to connect the hoses to pumps and spray jets and are also used as points of separation:

1.1 Windscreen and rear window washer system

Carry out following procedures:

– Pull the two coupling sections apart (no securing device) to loosen the connection.

– To secure connection, push two coupling sections together, until you hear and feel them engage.

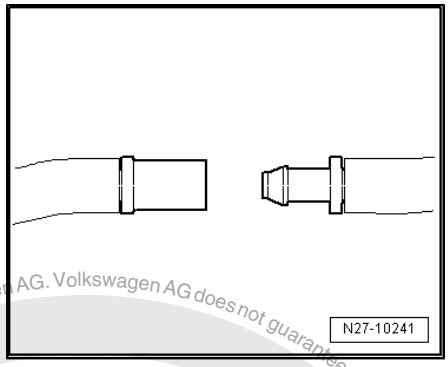

– To loosen connection, rotate lock ring -1- through 90° -arrow- and pull off hose connection.

– To secure connection, push on hose connection and rotate lock ring -1- in -direction of arrow- until it engages.

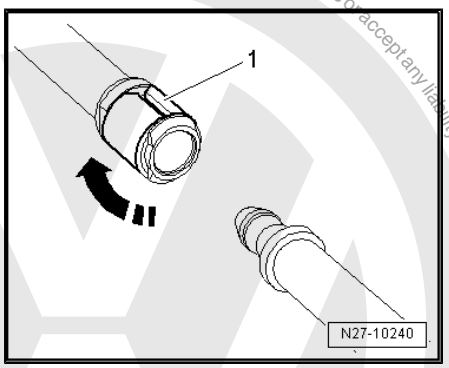

– To loosen connection, pull securing clip -1- up by approximately 1 mm -arrow- and pull off hose connection.

– To secure connection, push on hose connection and push securing clip -1- in until it engages.

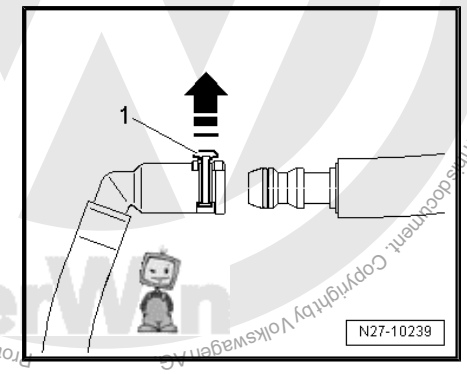

Protected by copyright. Copying for private or commercial purposes, in part or in whole, is not permitted unless authorised by Volkswagen AG. Volkswagen AG does not guarantee or accept any liability with respect to the correctness of information in this document. Copyright by Volkswagen AG.

Downloaded from www.Manualslib.com manuals search engine

– To loosen connection, pull securing clip -1- in -direction of arrow- and pull off hose connection.
– To secure connection, push on hose connection and push securing clip -1- in until it engages.

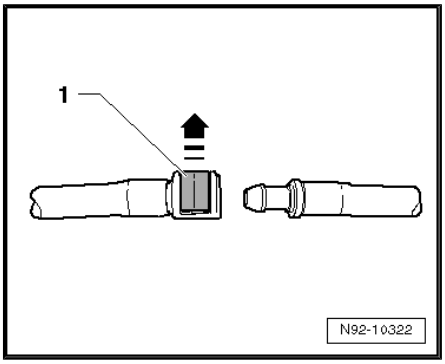

1.2 Headlight washer system

Carry out following procedures:

– To loosen connection, push securing clip -1- in -direction of arrow- and pull off hose connection.
– To secure connection, hold securing clip -1- pushed in -direction of arrow- and push on hose connection. Check that the securing clip has correctly engaged by depressing and trying to pull off without the clip.

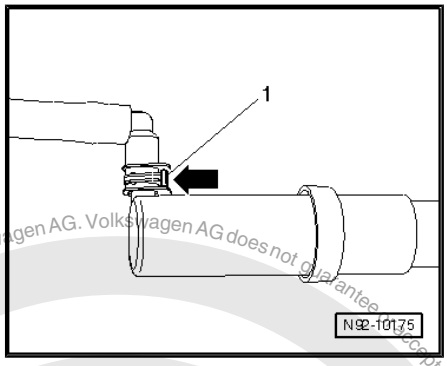

Protected by copyright. Copying for private or commercial purposes, in part or in whole, is not permitted unless authorised by Volkswagen AG. Volkswagen AG does not guarantee or accept any liability with respect to the correctness of information in this document. Copyright by Volkswagen AG.

Downloaded from www.Manualslib.com manuals search engine

Copyright by Volkswagen AG. Volkswagen AG does not guarantee or accept any liability with respect to the correctness of information in this document. Copying for private or commercial purposes, in part or in whole, is not permitted unless authorised by Volkswagen AG.

2 Hose repair

A new repair concept has been developed for repair work on wash system hoses. Various connectors, special EPDM hoses (ethylene-propylene terpolymer) and heat-shrink hose are available as spare parts.

2.1 General description

- The replacement parts can be found in the ⇒ electronic parts catalogue “(ETKA)” .
- Replacement parts are available for repair of both smooth and corrugated pipes.

2.2 Repairing smooth pipe

Smooth pipe with a diameter or 5x1 mm or 6x1 mm can be repaired with EPDM hose.

Carry out following procedures:

- Cut damaged section at right angles out of smooth pipe which is to be repaired.
- Select the appropriate EPDM hose -2- and cable ties according to the ⇒ electronic spare parts catalogue“(ETKA)” .
- Cut EPDM hose -2- to size so that smooth-type pipe ends -1- and -3- can be inserted approx. 10 mm in EPDM hose -2-.

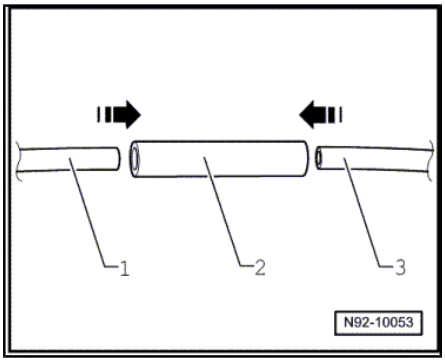

- Secure the repair joints with cable ties -1-.

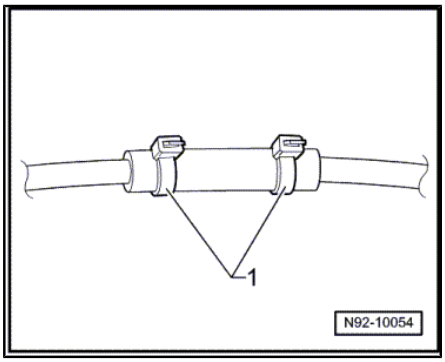

2.3 Repairing corrugated pipe

Special tools and workshop equipment required

Downloaded from www.Manualslib.com manuals search engine

- Hot air blower -VAS 5179- or

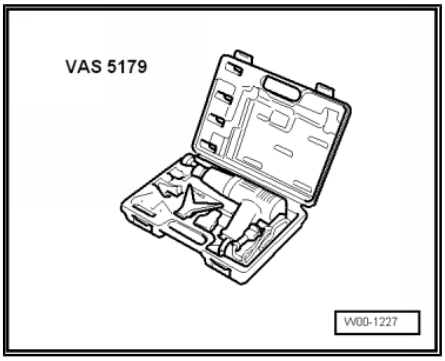

Note

- *Repair points must not be subjected to pulling or bending forces.*
- *If the damaged section is longer than 20 mm, a new piece of corrugated pipe must be used and the procedure described below must be performed twice.*

Carry out following procedures:

- Cut damaged section at right angles out of corrugated pipe which is to be repaired.
- Select the appropriate connectors -2- and -3- as well as the appropriate heat-shrink hose according to the ⇒ electronic spare parts catalogue "(ETKA)" .
- Heat end of corrugated pipe -1- with the hot air blower -VAS 5179- .
- Push connector -2- into corrugated pipe -2- -arrow A-.
- Heat end of corrugated pipe -4- with the hot air blower -VAS 5179- .
- Push connector -3- into corrugated pipe -4- -arrow B-.

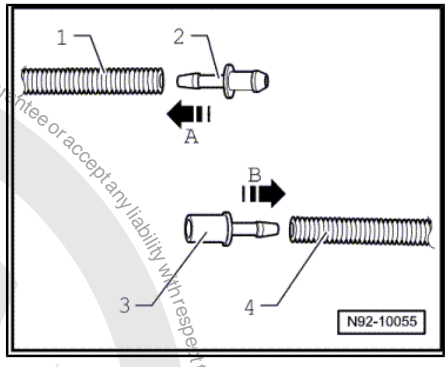

- Cut heat-shrink hose so that ends of corrugated pipe are each covered by about 20 mm -dimension x- of heat-shrink hose.
- Push heat-shrink hose over corrugated pipe, join connectors and secure repair joints with heat-shrink hose.

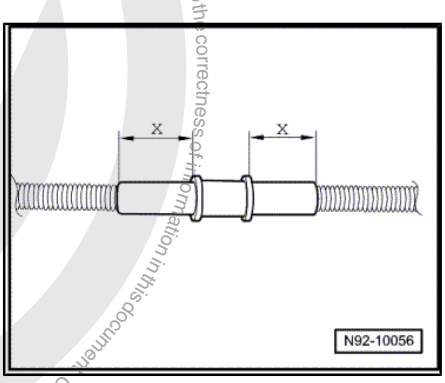

Protected by copyright. Copying for private or commercial purposes, in part or in whole, is not permitted unless authorised by Volkswagen AG. Volkswagen AG does not guarantee or accept any liability with respect to the correctness of information in this document. Copyright by Volkswagen AG.

Downloaded from www.Manualslib.com manuals search engine

3 Distinguishing features of jointless wiper blades

Distinguishing features from Bosch and Federal Mogul.

When renewing wiper rubbers, note the make. When renewing wiper blades, the same make must be used.

Wiper blades can be identified according to wiper arm fastening.

Bosch wiper blades -1 and 2-:

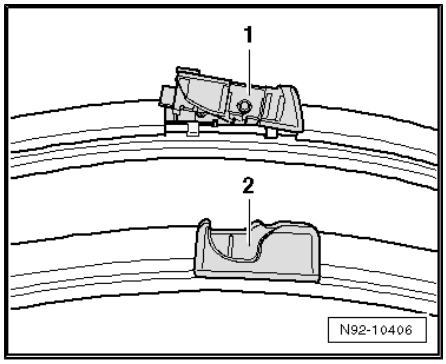

Federal Mogul wiper blades -1-:

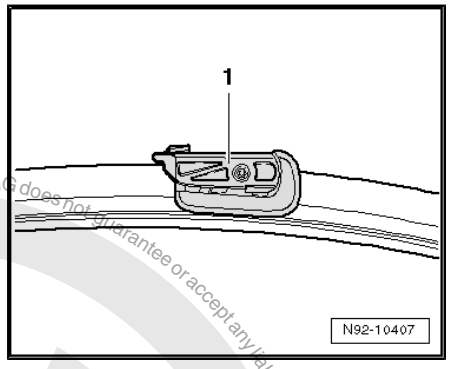

Protected by copyright. Copying for private or commercial purposes, in part or in whole, is not permitted unless authorised by Volkswagen AG. Volkswagen AG does not guarantee or accept any liability with respect to the correctness of information in this document. Copyright by Volkswagen AG.

Downloaded from www.Manualslib.com manuals search engine

94 – Lights, bulbs, switches - exterior

1 Operation and safety notes for gas discharge bulbs

If installation work is done on a main headlight with gas discharge bulbs, the following instructions must be observed:

- Notes on dangerous high voltage/currents ⇒ page 72
- Notes on pressure, temperature and radiation/arcs ⇒ page 73
- Assembly notes for gas discharge bulbs ⇒ page 74
- Disposal regulations for gas discharge bulbs ⇒ page 74

Special tools and workshop equipment required

- Safety goggles
- Gloves

> ⚠ **WARNING**
>
> *It is absolutely necessary to disconnect the battery -A- before working on parts of the gas discharge headlights marked with yellow high voltage symbols ⇒ Electrical system; Rep. Gr. 27 .*
>
> *Then switch dipped beam on and off again. This will eliminate any possible residual voltage.*
>
> *The gas discharge lamp control unit must never be operated without a gas discharge lamp.*
>
> *Due to the high voltages (above 28,000 V when igniting) and temperatures, the gas discharge bulb must only be operated in the headlight housing.*

> ⚠ **WARNING**
>
> - *Never change gas discharge bulbs if you are not familiar with the appropriate procedures, safety precautions and tools.*

Notes on dangerous high voltage and currents

> ⚠ **WARNING**
>
> *Control units for light systems, connectors and components pertaining to bulb holders conduct lethally high voltage.*
>
> *Operating the control unit and the starter unit is permitted only with the gas discharge bulb fitted.*

Protected by copyright. Copyright for private or commercial purposes, in part or in whole, is not permitted unless authorised by Volkswagen AG. Volkswagen AG does not guarantee or accept any liability with respect to the correctness of information in this document. Copyright by Volkswagen AG.

Downloaded from www.Manualslib.com manuals search engine

WARNING

- *Switch off ignition and all electrical consumers and remove ignition key.*
- *Before working on headlight system, make sure that no components are live and that the residual voltage after the headlights are switched off has dissipated.*
- *Residual voltage can be dissipated by turning the dipped beams on and then off again after withdrawing the ignition key.*
- *When working on the headlight system, ensure that the lights cannot be switched on.*

Notes on pressure, temperature and radiation/arcs

WARNING

- *The gas discharge bulb may be operated in the headlight housing only (touch protection due to very hot bulbs, absorption of UV radiation, avoidance of dazzling light, protection against explosion).*
- *The glass envelope of the gas discharge bulbs can be very hot - danger of burns!*
- *Avoid looking directly into the beam, as the UV rays from the gas discharge bulb are about 2.5 times greater than normal halogen bulbs.*
- *Avoid looking into the light beam (danger of glare); vision may be impaired for a substantial time.*

WARNING

- *Avoid contact with burst glass envelopes.*
- *H7 bulbs and gas discharge bulbs are under pressure and can explode while being changed - danger of injury.*
- *Always wear safety goggles and gloves when removing and installing gas discharge bulbs!*

Protected by copyright. Copying for private or commercial purposes, in part or in whole, is not permitted unless authorised by Volkswagen AG. Volkswagen AG does not guarantee or accept any liability with respect to the correctness of information in this document. Copyright by Volkswagen AG.

Downloaded from www.Manualslib.com manuals search engine

Repair notes for gas discharge bulbs

Caution

- *Before renewing a gas discharge bulb, always switch off the affected consumer.*
- *Switch off ignition and all electrical consumers and remove ignition key.*
- *Do not touch the glass envelope of the gas discharge bulb with bare fingers; use a clean cloth glove. When the gas discharge bulb is switched on, the heat would vaporise the oil of the finger prints which would then settle on the reflector, impairing the brightness of the headlight.*
- *A gas discharge bulb must always be replaced with a gas discharge bulb of the same kind. The designation appears on the base of the bulb or on the glass envelope.*
- *Properly engage connector during installation and ensure tight seating of the connection.*

Disposal regulations for gas discharge bulbs

WARNING

- *Gas discharge bulbs must be disposed of as hazardous waste; never dispose of gas discharge bulbs via household waste system.*
- *Gas discharge bulbs contain metallic mercury (Hg) and traces of thallium; never destroy these bulbs.*
- *These components must be recycled in the correct manner according to national law.*
- *Only dispose of in containers intended for this purpose at an authorised collection point.*

Protected by copyright. Copying for private or commercial purposes, in part or in whole, is not permitted unless authorised by Volkswagen AG. Volkswagen AG does not guarantee or accept any liability with respect to the correctness of information in this document. Copyright by Volkswagen AG.

Downloaded from www.Manualslib.com manuals search engine

96 – Lights, bulbs, switches - interior

1 12 V socket -U5-

1.1 Removing and installing 12 V socket -U5-

Caution

If excessive force is exerted on sockets -U- without bulb for socket illumination -L42- , the retaining sleeve may be damaged.

Puller -T40148- can only be used for removing sockets -U- (cigarette lighter -U1-) with bulb for socket illumination -L42- .

Puller -T40148- cannot be used for releasing locking lugs of sockets -U- without illuminated retaining sleeve.

Usually, sockets -U- without bulb for socket illumination -L42- cannot be removed without damaging them.

Removing and installing cigarette lighter -U1- ⇒ page 76

1.2 Removing and installing socket illumination bulb -L42-

The removal of the socket illumination bulb -L42- is performed in the same way as the removal of the cigarette lighter illumination bulb -L28- ⇒ page 80 .

Protected by copyright. Copying for private or commercial purposes, in part or in whole, is not permitted unless authorised by Volkswagen AG. Volkswagen AG does not guarantee or accept any liability with respect to the correctness of information in this document. Copyright by Volkswagen AG.

Downloaded from www.Manualslib.com manuals search engine

2 Cigarette lighter -U1-

The following descriptions apply to the rear left cigarette lighter -U3- / rear right cigarette lighter -U7- / rear cigarette lighter -U9- / 12 V socket 2 -U18- , 12 V socket 3 -U19- / 12 V socket 4 -U20- / cigarette lighter 2 -U25- and 12 V socket 5 -U26- as long as they are illuminated.

Caution

If excessive force is exerted on sockets -U- without bulb for socket illumination -L42- , the retaining sleeve may be damaged.

Puller -T40148- can only be used for removing sockets -U- (cigarette lighter -U1-) with bulb for socket illumination -L42- .

Puller -T40148- cannot be used for releasing locking lugs of sockets -U- without illuminated retaining sleeve.

Usually, sockets -U- without bulb for socket illumination -L42- cannot be removed without damaging them.

2.1 General description

Caution

If excessive force is exerted on sockets -U- without bulb for socket illumination -L42- , the retaining sleeve may be damaged.

Puller -T40148- can only be used for removing sockets -U- (cigarette lighter -U1-) with bulb for socket illumination -L42- .

Puller -T40148- cannot be used for releasing locking lugs of sockets -U- without illuminated retaining sleeve.

Usually, sockets -U- without bulb for socket illumination -L42- cannot be removed without damaging them.

With some vehicle equipment, bulb for socket illumination -L42- is not an incandescent bulb, but an LED. This LED is permanently attached to the retaining sleeve and cannot be renewed separately.

Retaining sleeves with a light bulb are available in different versions. On the one version, the light bulb can be replaced separately; on the other version, the light bulb cannot be replaced separately. In this case, the bulb carrier has to be replaced together with the light bulb.

Depending on the space requirement, the vehicles are equipped with various electric sockets -U- and cigarette lighter sockets. They differ in length and have different electrical connections. In the case of electrical sockets -U- and cigarette lighter sockets with a trailing wire, it may be necessary to perform additional work in order to gain access to the connector.

Protected by copyright. Copying for private or commercial purposes, in part or in whole is not permitted unless authorised by Volkswagen AG. Volkswagen AG does not guarantee or accept any liability with respect to the correctness of information in this document. Copyright by Volkswagen AG.

Downloaded from www.Manualslib.com manuals search engine

2.2 Assembly overview

Caution

If excessive force is exerted on sockets -U- without bulb for socket illumination -L42- , the retaining sleeve may be damaged.

Puller -T40148- can only be used for removing sockets -U- (cigarette lighter -U1-) with bulb for socket illumination -L42- .

Puller -T40148- cannot be used for releasing locking lugs of sockets -U- without illuminated retaining sleeve.

Usually, sockets -U- without bulb for socket illumination -L42- cannot be removed without damaging them.

1 - Cigarette lighter socket with trailing wire

2 - Cigarette lighter -U1-

3 - Socket -U-

4 - Cigarette lighter socket

5 - Retaining sleeve

6 - Bulb for socket illumination -L42-

- ❑ Bulb 12 V/1.2 W

7 - Bulb carrier

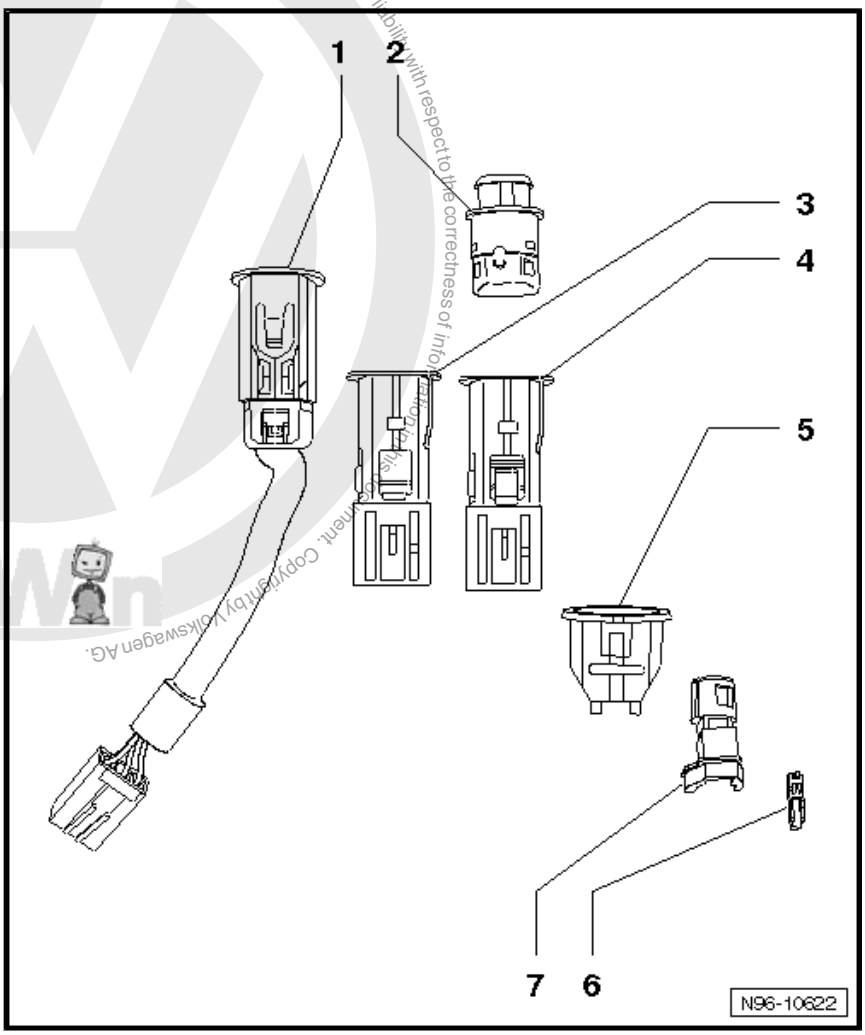

Protected by copyright. Copying for private or commercial purposes, in part or in whole, is not permitted unless authorised by Volkswagen AG. Volkswagen AG does not guarantee or accept any liability with respect to the correctness of information in this document. Copyright by Volkswagen AG.

Downloaded from www.Manualslib.com manuals search engine

2.3 Removing and installing cigarette lighter socket

Note

The removal and installation procedure is the same for all sockets -U- and is therefore described here only for the cigarette lighter socket.

Caution

If excessive force is exerted on sockets -U- without bulb for socket illumination -L42- , the retaining sleeve may be damaged.

Puller -T40148- can only be used for removing sockets -U- (cigarette lighter -U1-) with bulb for socket illumination -L42- .

Puller -T40148- cannot be used for releasing locking lugs of sockets -U- without illuminated retaining sleeve.

Usually, sockets -U- without bulb for socket illumination -L42- cannot be removed without damaging them.

Special tools and workshop equipment required

- Puller -T40148-

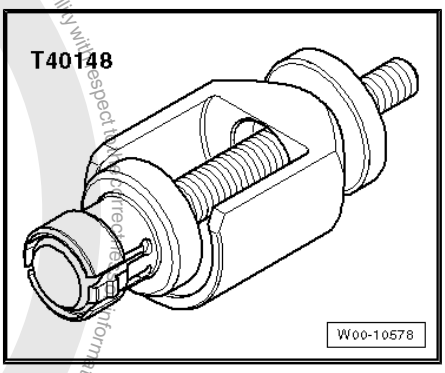

- Thrust piece -40148/1-

Carry out following procedures:

Removing

– Remove cigarette lighter -U1- , dummy cigarette lighter etc. from socket -U- .

Note

For reasons of clarity, socket -U- is removed in illustration.

Caution

Socket -U- or retaining sleeve can be damaged.

Ensure that the puller -T40148- is seated correctly, otherwise the retaining lugs of the retaining sleeve will not be released.

Protected by copyright. Copyright by Volkswagen AG. Volkswagen AG does not guarantee or accept any liability with respect to the correctness of information in this document. Copying for private or commercial purposes, in part or in whole, is not permitted unless authorised by Volkswagen AG.

Downloaded from www.Manualslib.com manuals search engine

– Push puller -T40148- -arrow- into socket -U- so that locking lugs -1- engage in recesses -2-.

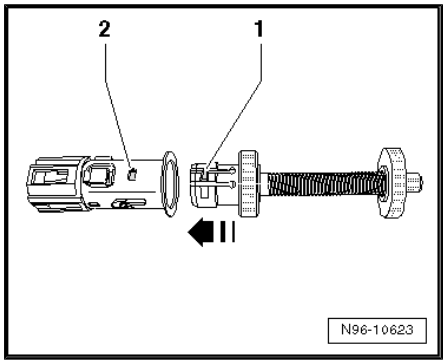

– Pull grip -3- in direction of -arrow- to release locking lugs of retaining sleeve.

– Pull socket -U- out of retaining sleeve using puller -T40148- .

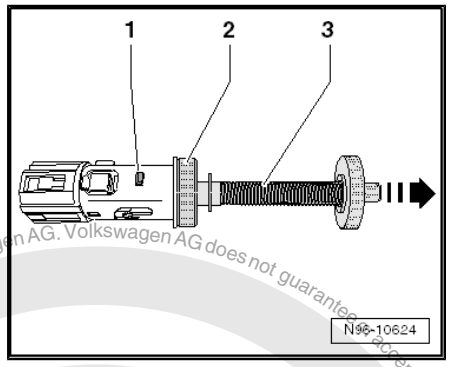

Caution

The wiring for socket -U- can be damaged.

Take care not to stretch wiring when pulling out socket -U- .

Depending on the mounting location, use of the thrust piece -40148/1- -2- with the knurled nut -1- is recommended.

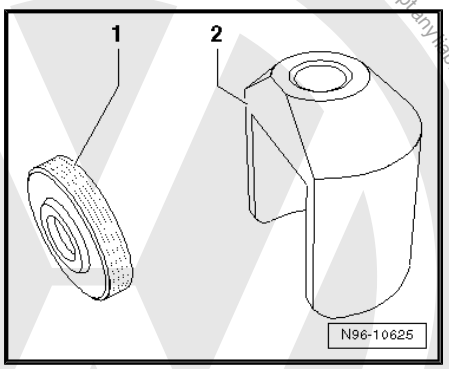

Caution

When using the thrust piece -40148/1-, ensure that no surrounding components are damaged.

– Disconnect connector of socket -U- .

Note

Depending on the space requirement, the vehicles are equipped with various electric sockets -U- and cigarette lighter sockets. They differ in length and have different electrical connections. In the case of electrical sockets -U- and cigarette lighter sockets with a trailing wire, it may be necessary to perform additional work in order to gain access to the connector.

Protected by copyright. Copying for private or commercial purposes, in part or in whole, is not permitted unless authorised by Volkswagen AG. Volkswagen AG does not guarantee or accept any liability with respect to the correctness of information in this document. Copyright by Volkswagen AG.

Downloaded from www.Manualslib.com manuals search engine

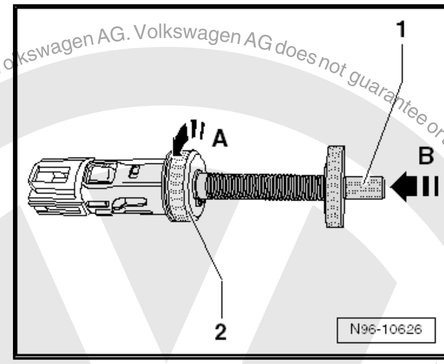

– Release puller -T40148- locking lugs by pressing spindle -1- in -direction of arrow B-. Then release puller -T40148- -2- by turning it briefly to left in -direction of arrow A-. Remove puller -T40148- from socket -U- .

Note

Ensure that the puller -T40148- locking lugs are not spread.

Caution

Cigarette lighter -U1- might be ejected out of the socket -U- after the heating phase.

When puller -T40148- is inserted, retaining springs of socket -U- are pressed apart and retaining force is reduced.

After removing socket -U- , carefully press retaining springs together and check if cigarette lighter -U1- remains in removal position after heating phase.

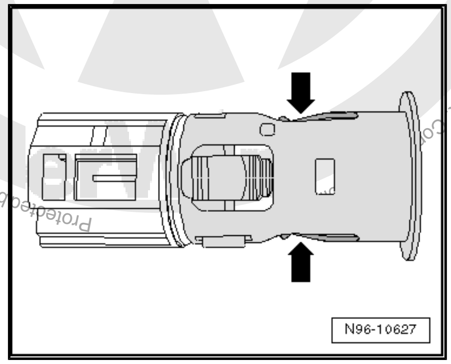

– Carefully press retaining springs of socket -U- together -arrows-.

– Check if cigarette lighter -U1- remains in removal position after heating phase and ensure it is not ejected in vehicle interior.

Installing

Installation is carried out in reverse order of removal.

2.4 Removing and installing cigarette lighter illumination bulb -L28-

Note

- *With some vehicle equipment, bulb for cigarette lighter illumination -L28- is not an incandescent bulb, but an LED. This LED is permanently attached to the retaining sleeve and cannot be replaced separately.*
- *Retaining sleeves with a light bulb are available in different versions. One version with replaceable light bulb and one without replaceable light bulb. In this case, the bulb carrier has to be replaced together with the light bulb.*

Carry out following procedures:

Removing

– Remove socket -U- ⇒ page 78 .

Protected by copyright. Copying for private or commercial purposes, in part or in whole, is not permitted unless authorised by Volkswagen AG. Volkswagen AG does not guarantee or accept any liability with respect to the correctness of information in this document. Co

Downloaded from www.Manualslib.com manuals search engine

– Press retaining lugs -1- in -direction of arrow- and remove retaining sleeve together with bulb carrier.
– Unclip bulb carrier from retaining sleeve.

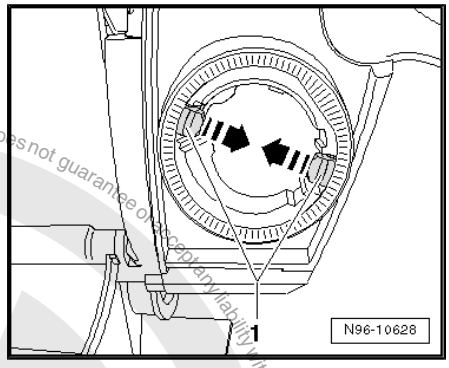

– Separate bulb carrier in areas -A- and -B-.
– Open part -B- of bulb carrier.

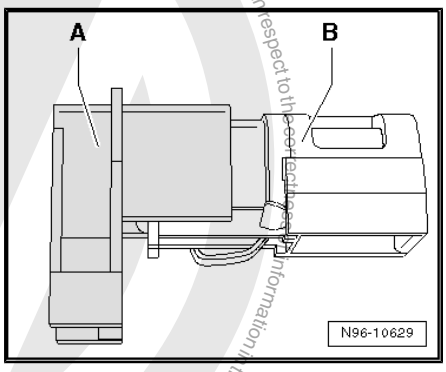

– Remove light bulb in direction of -arrow-.

Installing

Installation is carried out in reverse order of removal.

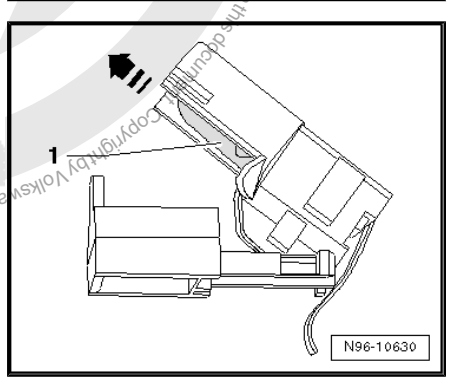

Protected by copyright. Copying for private or commercial purposes, in part or in whole, is not permitted unless authorised by Volkswagen AG. Volkswagen AG does not guarantee or accept any liability with respect to the correctness of information in this document. Copyright by Volkswagen AG.

Downloaded from www.Manualslib.com manuals search engine

97 – Wiring

1 Vehicle diagnosis, testing and information system -VAS 5051B-

WARNING

- *During testing or measuring operations using a vehicle diagnosis, testing and information system -VAS 5051B- , there is a risk of serious or even fatal injury!*
- *If vehicle diagnosis, testing and information system -VAS 5051B- is lodged in the activity area of an airbag during a testing or measuring operation, a triggered airbag can result in serious or even fatal injury!*
- *During testing and measuring operations, work with a second person who can operate vehicle diagnosis, testing and information system -VAS 5051B- from one of the back seats.*

Note

All work procedures can be found in "guided fault finding" and "guided functions" modes.

Additional information:

- ⇒ Self-study programme No. 202 ; Vehicle diagnostic, testing and information system VAS 5051
- ⇒ Self-study programme No. 256 ; VAS 5052
- ⇒ Self-study programme No. 294 ; Online connection of VAS 5051

Connecting vehicle diagnosis, testing and information system -VAS 5051B- ⇒ page 82

1.1 Connecting vehicle diagnosis, testing and information system -VAS 5051B-

Note

Observe the latest operating instructions for vehicle diagnosis, testing and information system -VAS 5051B- , which are displayed after selecting the "Administration" and "Operating Manual" keys.

Special tools and workshop equipment required

Volkswagen AG. Volkswagen AG does not guarantee or accept any liability with respect to the correctness of information in this document. Copyright by Volkswagen AG. Protected by copyright. Copying for private or commercial purposes, in part or in whole, is not permitted unless authorised by Volkswagen AG.

Downloaded from www.Manualslib.com manuals search engine

- Vehicle diagnosis, testing and information system -VAS 5051B-

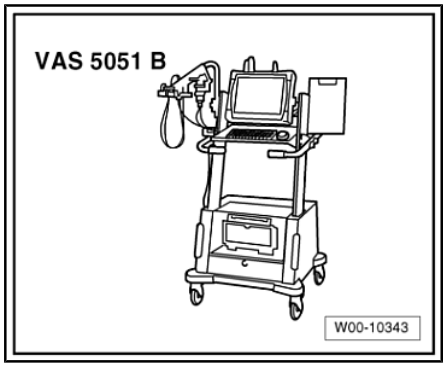

Carry out following procedures:

– Switch off ignition and all electrical loads.
– Apply handbrake.
– Vehicles with automatic gearbox, move selector lever to position “P” or “N”.
– Vehicles with manual gearbox, move gear lever to neutral position.
– With ignition switched off, connect vehicle diagnosis, testing and information system -VAS 5051B- to diagnostic connection -arrow- in vehicle.
– Switch on ignition.

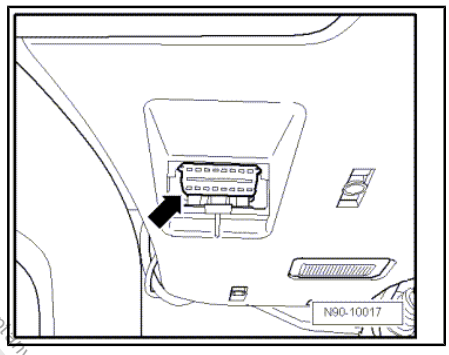

Note

Connect all other and following vehicle diagnostic testers accordingly in sequence described above.

1.2 Connecting vehicle diagnostic tester Bora Model Year 1998 to 2003

Carry out following procedures:

– Switch off ignition and all electrical loads.
– Apply handbrake.
– Vehicles with automatic gearbox, move selector lever to position “P” or “N”.
– Vehicles with manual gearbox, move gear lever to neutral position.

Protected by copyright. Copying for private or commercial purposes, in part or whole, is not permitted unless authorised by Volkswagen AG. Volkswagen AG does not guarantee or accept any liability with respect to the correctness of information in this document. Copyright by Volkswagen AG.

Downloaded from www.Manualslib.com manuals search engine

– Pull out trim -1- in -direction of arrow-.
– With the ignition switched off, connect the vehicle diagnostic tester to the vehicle diagnosis connection.
– Switch on ignition.

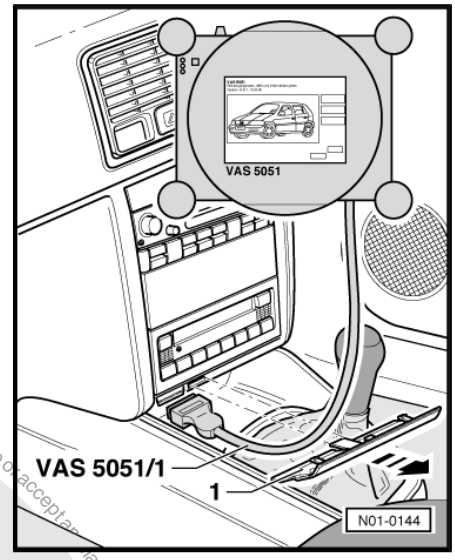

Note

Connect all other and following vehicle diagnostic testers accordingly in sequence described above.

Protected by copyright. Copying for private or commercial purposes, in part or in whole, is not permitted unless authorised by Volkswagen AG. Volkswagen AG does not guarantee or accept any liability with respect to the correctness of information in this document. Copyright by Volkswagen AG.

Downloaded from www.Manualslib.com manuals search engine

2 Repairs to wiring harnesses and connectors

2.1 Wiring harness repair set

2.1.1 Wiring harness repair set -VAS 1978-

Wiring harness repair set -VAS 1978- allows optimal repair quality to be achieved in the area of vehicle electrics. Using the tools, repairs to connectors and wiring open circuits can be carried out. To do this, complete repair wire sections with contacts already crimped on are used and joined to the vehicle's own wiring harness with the aid of crimp connectors. A perfect electrical connection can be achieved using crimping pliers -VAS 1978/1- with head adapter -VAS 1978/2- and three different crimp recesses as well as a hot air blower, 220 V/50 Hz -VAS 1978/14- for shrink-fitting crimp connectors.

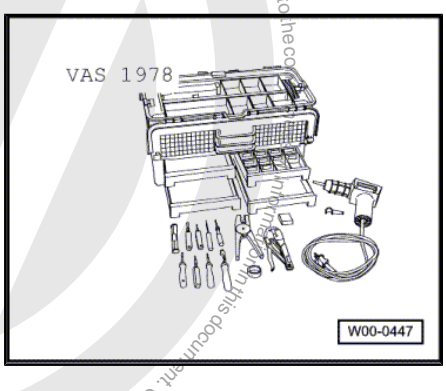

Wiring harness repair set -VAS 1978-

Additional information:

- ⇒ Operating instructions Wiring harness repair set -VAS 1978-

2.1.2 Upgrade kit -VAS 1978/50-

Upgrade kit -VAS 1978/50- is required to bring the “old” wiring harness repair set -VAS 1978- up to the latest standard of wiring harness repair set -VAS 1978A- . The upgrade kit -VAS 1978/50- consists of 4 assembly and 10 release tools, new crimping pliers (base tool) -VAS 1978/1-2- for crimp connector with head adapter 0.35-2.5mm/2 -VAS 1978/1-1- , head adapter 4.0-6.0mm/2 -VAS 1978/2A- and head adapter for JPT contact -VAS 1978/9-1- . Also included are new adhesive labels, a new set of operating instructions, crimp connectors for 0.35 mm^2 wiring cross sections and a roll of black felt adhesive tape.

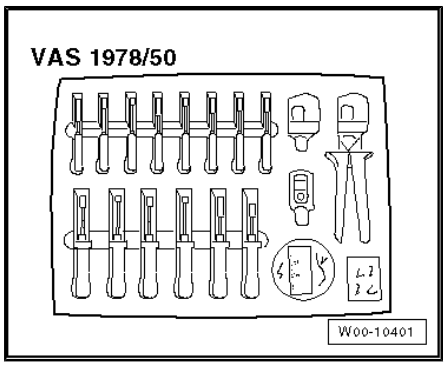

Upgrade kit -VAS 1978/50-

2.1.3 Wiring harness repair set -VAS 1978A-

The new wiring harness repair set -VAS 1978A- allows optimal repair quality to be achieved in the area of vehicle electrics. Using the new pliers, repairs to connectors and wiring open circuits can be carried out. To do this, complete repair wire sections with contacts already crimped on are used and joined to the vehicle's own wiring harness with the aid of four different types of crimp connectors. A perfect electrical connection can be achieved using new crimping pliers (base tool) -VAS 1978/1-2- with interchangeable head adapter 0.35-2.5mm/2 -VAS 1978/1-1- or head adapter 4.0-6.0mm/2 -VAS 1978/2A- and a hot air blower, 220 V/50 Hz -VAS 1978/14- for shrink-fitting crimp connectors.

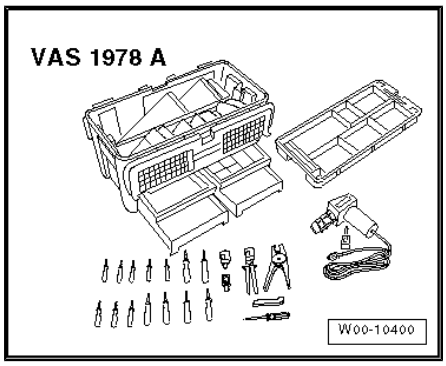

Wiring harness repair set -VAS 1978A-

Additional information:

- ⇒ Operating instructions Wiring harness repair set -VAS 1978A-

The wiring harness repair set -VAS 1978A- has been supplemented with the wiring harness repair set -VAS 1978B- .

Downloaded from www.Manualslib.com manuals search engine

2.1.4 Set of release tools -VAS 1978/35-

The set of release tools -VAS 1978/35- is used to release various primary and secondary locking devices in Group vehicles. The set comprises of 26 different tools with which, for example, round connector systems, flat contacts with one or two locking devices and also single wire seals can be released and fitted.

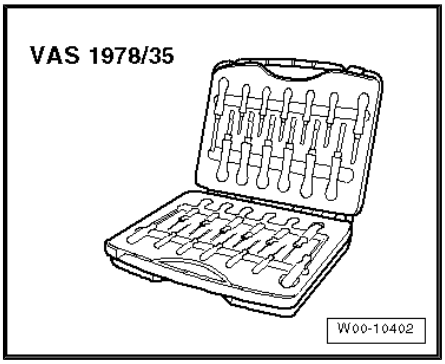

Release tool set -VAS 1978/35-

Which release tool belongs to which locking device is indicated in the table in the ⇒ operating instructions of the set of release tools -VAS 1978/35- .

2.2 Tool descriptions

2.2.1 Special pliers with insert

Crimping pliers -VAS 1978/1- with head adapter -VAS 1978/2- are part of wiring harness repair set -VAS 1978- / wiring harness repair set -VAS 1978A- / wiring harness repair set -VAS 1978B- and is used to crimp connectors during wiring harness repairs.

Colour of crimp connector	Colour of crimp recess	Wiring cross section
Yellow.	Yellow.	0.35 mm^2
Red.	Red.	0.5 mm^2 to 1.0 mm^2
Blue	Blue	1.5 mm^2 to 2.5 mm^2
Yellow.	Yellow.	4.0 mm^2 to 6.0 mm^2

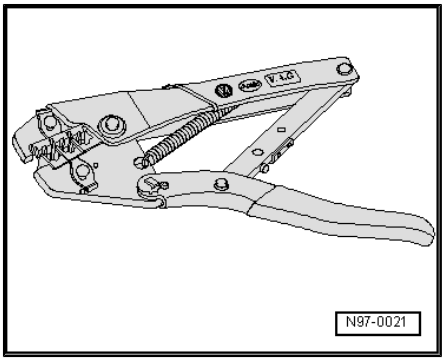

Note

- *As an alternative, the connectors can also be crimped with crimping pliers (base tool) -VAS 1978/1-2- in conjunction with head adapters 0.35 - 2.5 mm/2 -VAS 1978/1-1- or 4.0 - 6.0 mm/2 -VAS 1978/2A-* *⇒ page 89* *.*
- *Ensure that the correct crimp recess is chosen for the crimp connectors being used.*
- *The insulation on the wires must not be crimped.*

Protected by copyright. Copying for private or commercial purposes, in part or in whole, is not permitted unless authorised by Volkswagen AG. Volkswagen AG does not guarantee or accept any liability with respect to the correctness of information in this document. Copyright by Volkswagen AG.

Downloaded from www.Manualslib.com manuals search engine

2.2.2 Release tools for contacts

The various release tools serve as a means of detaching the different contacts from the contact housings without damage.

A selection of release tools is included in wiring harness repair set -VAS 1978- / wiring harness repair set -VAS 1978A- / wiring harness repair set -VAS 1978B- . The complete set of release tools is included in set of release tools -VAS 1978/35- ⇒ page 86

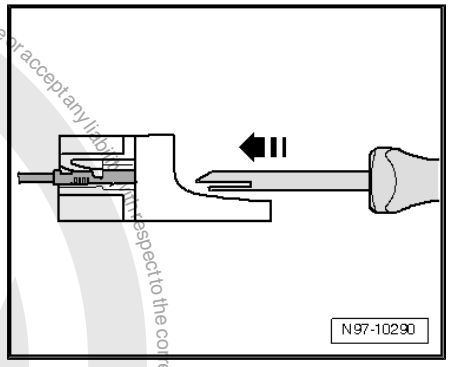

> ⚠ **WARNING**
>
> ***Some tools are equipped with a tool safety device. This must be pushed over the tip of the tool after use in order to protect the tip and prevent personal injury.***

Releasing and dismantling contact housings ⇒ page 105 .

2.2.3 Assembly tools for single wire seals

The assembly tools serve as a means of sliding the single wire seals fully into the contact housing without damage and thereby assure complete sealing between single wire and contact housing.

Four assembly tools for single wire seals are included in wiring harness repair set -VAS 1978- / wiring harness repair set -VAS 1978A- / wiring harness repair set -VAS 1978B- .

Assembling single wire seals ⇒ page 103 .

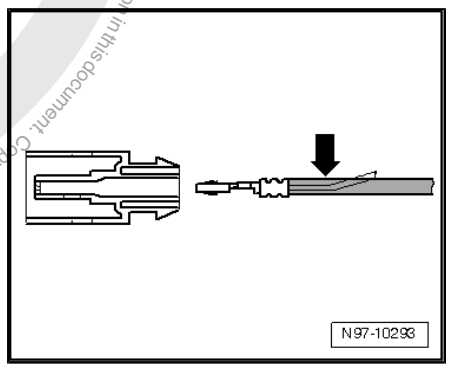

2.2.4 Wire strippers -VAS 1978/3-

Wire strippers -VAS 1978/3- serve as a means of stripping insulation off wires and cutting wires in the correct manner.

Wire strippers -VAS 1978/3- are included in wiring harness repair set -VAS 1978- / wiring harness repair set -VAS 1978A- / wiring harness repair set -VAS 1978B- .

Wire stripper -VAS 1978/3- has an adjustable limit stop within the pliers jaws, with which the desired length of insulation to be removed can be adjusted.

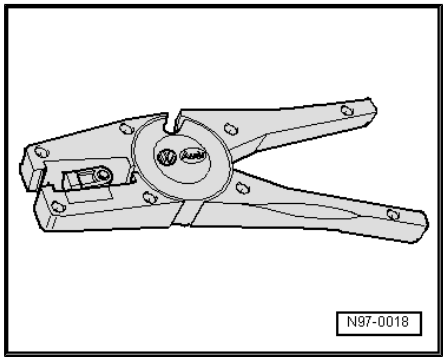

Stripping

– Adjust the sliding limit stop in the pliers jaws to the desired length of insulation to be removed.

Downloaded from www.Manualslib.com manuals search engine

– Insert the end of the wire from the front fully into the pliers jaws and squeeze wire stripper -VAS 1978/3- together completely.
– Open wire stripper -VAS 1978/3- and remove stripped wire end.

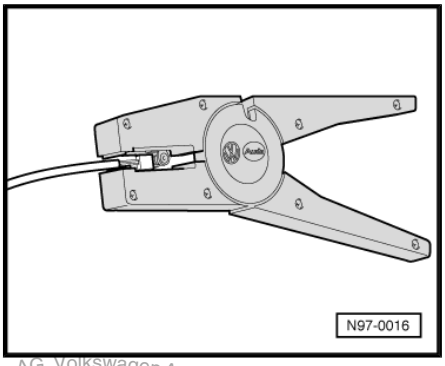

– Cut wire, using cutter on upper side of wire stripper -VAS 1978/3- .

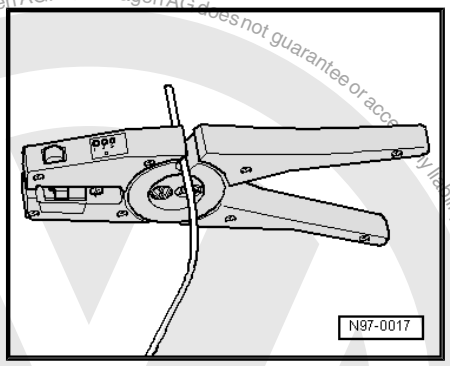

2.2.5 Hot air blower, 220 V / 50 Hz -VAS 1978/14-

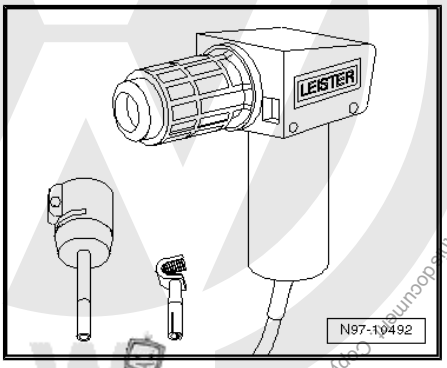

Hot air blower, 220 V / 50 Hz -VAS 1978/14-

> ⚠ Caution
>
> *When shrink-fitting, take care not to damage any other wiring, plastic parts or insulating material with the hot air blower, 220 V/50 Hz -VAS 1978/14- .*
>
> *Observe ⇒ Operating instructions for hot air blower, 220 V/50 Hz -VAS 1978/14- .*

The hot air blower, 220 V/50 Hz -VAS 1978/14- is used in conjunction with shrink element for hot air blower -VAS 1978/15- to shrink fit the crimp connectors. After crimping, the crimp connector has to be shrink fitted using the hot air blower, 220 V/50 Hz -VAS 1978/14- in order to prevent any ingress of moisture.

The hot air blower, 220 V/ 50 Hz, -VAS 1978/14- is included in wiring harness repair set -VAS 1978- / wiring harness repair set -VAS 1978A- / wiring harness repair set -VAS 1978B- .

Shrink fitting crimp connectors using hot air blower, 220 V/50 Hz -VAS 1978/14- ⇒ page 98 or ⇒ page 100 .

Protected by copyright. Copyright by Volkswagen AG. Volkswagen AG does not guarantee or accept any liability with respect to the correctness of information in this document. Copying for commercial purposes, part or in whole, is not permitted unless authorised by Volkswagen AG.

Downloaded from www.Manualslib.com manuals search engine

2.2.6 Crimping pliers -VAS 1978/1A-

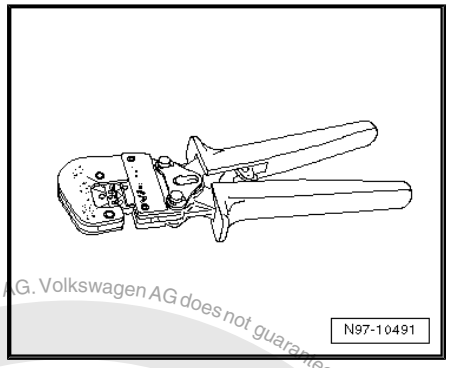

Crimping pliers -VAS 1978/1A- or crimping pliers (base tool) -VAS 1978/1-2- together with head adapter 0.35-2.5mm/2 -VAS 1978/1-1- and head adapter 4.0-6.0mm/2 -VAS 1978/2A- are used to crimp connectors from wiring harness repair sets.

Crimping connectors using crimping pliers -VAS 1978/1A- ⇒ page 100 .

The following heads adapters are available for crimping pliers (base tool) -VAS 1978/1-2- :

- Head adapter 0.35 mm² - 2.5 mm² -VAS 1978/1-1-
- Head adapter 4.0 - 6.0 mm² -VAS 1978/2 A-
- Head adapter for JPT contacts -VAS 1978/9-1-

In conjunction with head adapter for JPT contacts -VAS 1978/9-1- , the crimping pliers are used to crimp contacts to single wires during repairs to wiring with cross sections up to 0.35 mm^2 ⇒ page 96 .

Replacing head adapter

– Open up the crimping pliers (base tool) -VAS 1978/1-2- completely.

– Unclip both locking pins -arrows- from the base of the crimping pliers (base tool) -VAS 1978/1-2- .

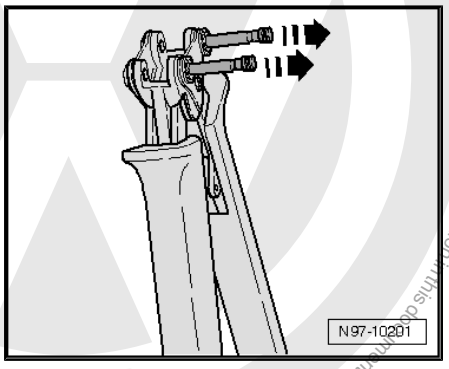

– Insert the required head adapter from above -arrow- in the base of the crimping pliers (base tool) -VAS 1978/1-2- .

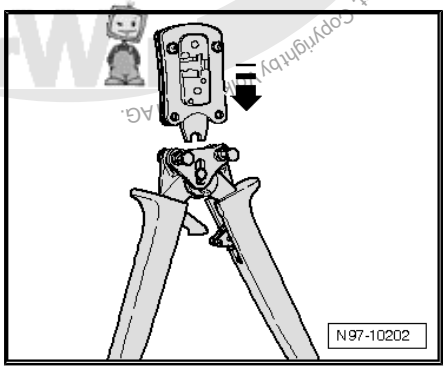

Protected by copyright. Copying for private or commercial purposes, in part or in whole, is not permitted unless authorised by Volkswagen AG. Volkswagen AG does not guarantee or accept any liability with respect to the correctness of information in this document. Copyright by Volkswagen AG.

Downloaded from www.Manualslib.com manuals search engine

– Lock the head adapter by engaging the pins -arrows- in the base of the crimping pliers (base tool) -VAS 1978/1-2- .

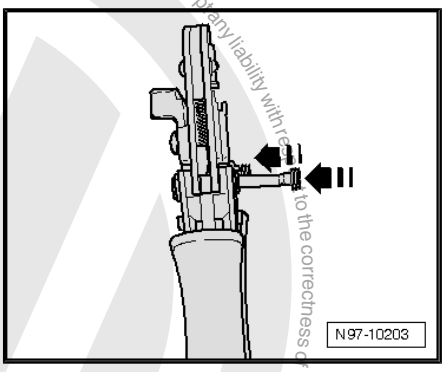

2.3 General notes concerning repairs to vehicle electrical system

Caution

When battery -A- is disconnected and reconnected, the procedure described in the workshop manual must be strictly observed ⇒ Electrical system; Rep. Gr. 27 .

WARNING

Some tools are equipped with a tool safety device. This must be pushed over the tip of the tool after use in order to protect the tip and prevent personal injury.

- Observe the latest notes in the respective workshop manual when carrying out repairs.
- Comply with country-specific regulations.
- Always disconnect battery -A- before working on electrical system ⇒ Electrical system; Rep. Gr. 27 . Disconnecting the battery -A- (open circuit) ensures a safe working environment for repairs to the electrical system. Only the battery's positive cable needs to be disconnected for removal of the battery -A- .
- Before starting repairs, it is important to identify the cause of damage (e.g. sharp edges on body panels, defective electrical components, corrosion, etc.).
- For further information on procedures such as the removal and installation of individual components, please refer to the relevant workshop manual.
- Soldering is not permitted for repairs to vehicle wiring.
- Wiring harness and connector repairs to vehicle electrical system may only be carried out using wiring harness repair set -VAS 1978- / wiring harness repair set -VAS 1978A- / wiring harness repair set -VAS 1978 B- .
- Only use yellow wires for repairs to wiring harnesses.
- Wiring harness repairs may not be integrated in the vehicle's own wiring harness and must be marked with the use of yellow adhesive tape.
- These yellow wires and any part of the wiring harness marked with yellow insulating tape indicate a previous repair.
- Crimp connectors may never be repaired. Lay wiring parallel to the defective wiring.

Downloaded from www.Manualslib.com manuals search engine

- After crimping, crimp connectors must to be shrink fitted using the hot air blower, 220 V/50 Hz -VAS 1978/14- , in order to prevent any ingress of moisture.
- It is essential that the supplementary information is observed regarding repairs to wiring harnesses in airbag and belt tensioner systems, fibre-optic cables, CAN bus lines, aerial cables and wiring with cross sections up to 0.35 mm^2 ⇒ page 96 .
- Carry out a function test after every repair. It may be necessary for the fault memory to be interrogated, erased and/or for the systems to be reset.
- If possible, do not loosen any earth wires from the body (danger of corrosion).
- Wiring harness repair set -VAS 1978 B- and previous versions do not cover all wiring cross sections that occur in the vehicle. If the required wiring cross section is not available, the next largest one should be used.
- Screened wires must not be repaired. If damaged they must be replaced complete.
- Heat resistant wiring can be found in various places in the vehicle, mainly in the engine compartment. Heat resistant wiring can be identified by its slightly matt and softer insulation. To repair these wires, only heat resistant wiring may be used.

2.4 Repairs to wiring harnesses

Note

Observe the general notes on repairs to the vehicle electrical system *⇒ page 90* *.*

- Notes on repairs to wiring harnesses ⇒ page 91 .
- Notes on repairs to airbag and belt tensioner wiring ⇒ page 92 .
- Notes on repairs to fibre-optic cables ⇒ page 93 .
- Notes on repairs to CAN bus wiring ⇒ page 94 .
- Notes on replacement of aerial cables ⇒ page 94 .
- Notes on repairs to wiring with cross sections up to 0.35 mm^2 ⇒ page 96 .
- Notes on repair of wiring open circuit with one repair position ⇒ page 98 .
- Notes on repair of wiring open circuit with two repair positions ⇒ page 100 .

2.4.1 Notes on repairs to wiring harnesses

- Observe the general notes on repairs to the vehicle electrical system ⇒ page 90 .
- The wiring cross sections that can be found in the vehicle are not all available in wiring harness repair set -VAS 1978- / wiring harness repair set -VAS 1978A- . If the required wiring cross section is not available, the next largest one should be used.
- Wiring harness and connector repairs to the vehicle electrical system may only be carried out using wiring harness repair set -VAS 1978- / wiring harness repair set -VAS 1978A- .
- Soldering is not permitted for repairs to vehicle wiring.

Protected by copyright. Copying for private or commercial purposes in part or in whole is not permitted unless authorised by Volkswagen AG. Volkswagen AG does not guarantee or accept any liability with respect to the correctness of information in this document. Copyright by Volkswagen AG.

Downloaded from www.Manualslib.com manuals search engine

- Only use yellow wires for repairs to wiring harnesses.
- Wiring harness repairs may not be integrated in the vehicle's own wiring harness and must be marked with the use of yellow adhesive tape.
- A yellow wire or a section of wiring wrapped with yellow insulating tape always indicates a previous repair.
- Crimp connectors may never be repaired. Lay wiring parallel to the defective wiring.
- After crimping, crimp connectors must to be shrink fitted using the hot air blower, 220 V/50 Hz -VAS 1978/14- , in order to prevent any ingress of moisture.
- Screened wires must not be repaired. If damaged they must be replaced complete.
- Heat resistant wiring can be found in various places in the vehicle, mainly in the engine compartment. Heat resistant wiring can be identified by its slightly matt and softer insulation. To repair these wires, only heat resistant wiring may be used.
- It is essential that the supplementary information is observed regarding repairs to wiring harnesses in airbag and belt tensioner systems, fibre-optic cables, CAN bus lines, aerial cables and wiring with cross sections up to 0.35 mm^2.

2.4.2 Notes on repairs to airbag and belt tensioner wiring

In addition to the general notes on repairs to wiring harnesses, the following instructions must be observed on how to repair wiring in airbag and belt tensioner systems:

WARNING

- *Airbag and seat belt tensioner can fail.*
- *Faulty repairs to the airbag and seat belt tensioning system can cause malfunctions in the passenger protection system.*
- *For repair work on airbag and seat belt tensioner wiring harnesses, only contacts, connectors and wiring designed specifically for this purpose may be used ⇒ Electronic parts catalogue"(ETKA)" .*

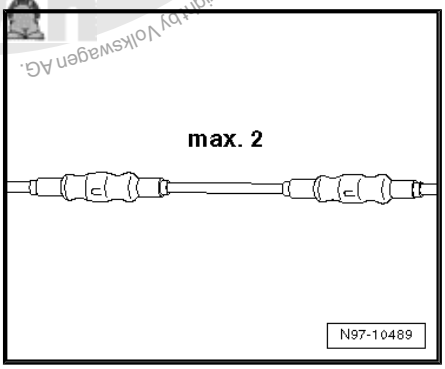

Protected by copyright. Copying for private or commercial purposes, in part or in whole, is not permitted unless authorised by Volkswagen AG. Volkswagen AG does not guarantee or accept any liability with respect to the correctness of information in this document. Copyright by Volkswagen AG.

Downloaded from www.Manualslib.com manuals search engine

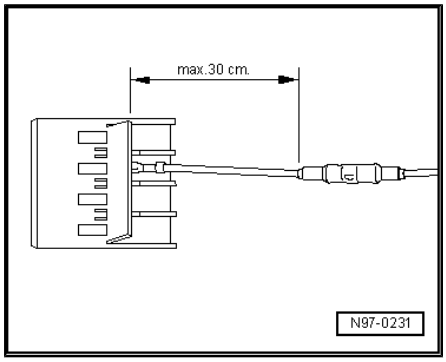

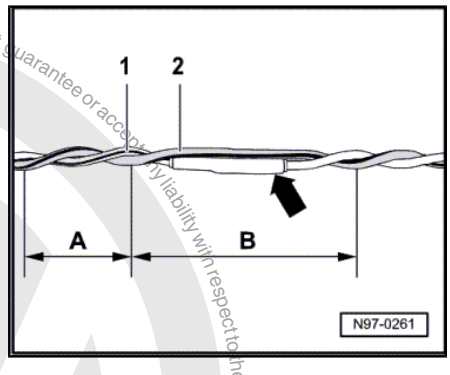

- Wires from the airbag and belt tensioner wiring harness may only be repaired using wiring harness repair set -VAS 1978- / wiring harness repair set -VAS 1978A- / wiring harness repair set -VAS 1978 B- .
- Observe vehicle stickers indicating high voltage components. Before carrying out repairs, allow residual voltage to dissipate ⇒ General body repairs, interior; Rep. Gr. 69 .
- For repairs to wiring in the airbag and belt tensioner system, a maximum of two positions may be repaired. The more the repairs there are in the wiring, the greater the resistance and this can trigger faults in the self-diagnosis of the system.
- To avoid corrosion, the crimp connectors are always to be shrink-fitted when performing airbag or belt tensioner wiring harness repairs.
- Only use yellow wires for repairs to wiring harnesses.
- Do not incorporate the repaired wiring back in the vehicle's own wiring harness and mark the area of repair clearly with yellow insulating tape.
- Repairs in the area of the airbag or belt tensioner should not be more than 30 cm from the next contact housing. Together with the yellow insulating tape, this gives a clear indication of repairs that have already been carried out.
- In series production, the wires leading to the trip units (airbags) are twisted with a length of lay of 20 mm ±5 mm. This length of lay is ensured in series production by means of standard-part numbers for pairs of wires and must be adhered to under all circumstances when sections of twisted wires are repaired.
- During repairs, the wiring to the trip units (airbags) must have the same length. When wires -1- and -2- are twisted, the length of lay of A = 20 mm ±5 mm must be adhered to under all circumstances.
- It must be ensured that no part of the wiring, including wiring in the vicinity of crimp connectors -arrow-, is longer than B = 100 mm without the wires being twisted.

2.4.3 Notes on repairs to fibre-optic cables

There is no provision for fibre-optic cable repairs at Volkswagen. In the event of repairs, the entire fibre optic wiring harness must be replaced. To do this, the following safety precautions must be observed:

- Avoid sharp bends in the fibre-optic cable; the bend radius should be no tighter than 25 mm.
- Do not route fibre-optic cables over sharp edges.
- The end pieces (lenses) must not be made dirty or touched with bare hands.

Downloaded from www.Manualslib.com manuals search engine

- Do not expose fibre-optic cables to heat.
- Entwining two fibre-optic cables or a fibre-optic cable with a copper wire is not permissible.

2.4.4 Notes on repairs to CAN bus wiring

- An unshielded two-wire line -1- and -2- with a cross section of 0.35 mm^2 or 0.5 mm^2 is used for CAN bus wiring.
- The colour codes of the CAN bus wiring can be gleaned from the following table:

Powertrain CAN, high	Orange/black
Convenience CAN, high	Orange/green
Infotainment CAN, high	Orange/violet
CAN low wire, all	Orange/brown

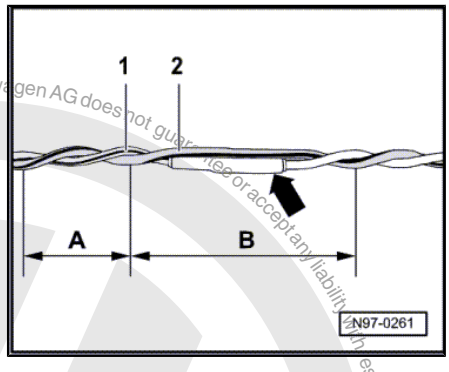

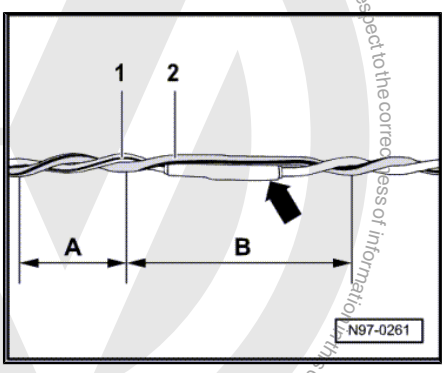

- Repairs to CAN bus wiring can be carried out either with sections of repair wiring with the correct cross section or with entwined wires “green/yellow” or “white/yellow” from the replacement parts catalogue ⇒ Electronic parts catalogue “ETKA” .
- When repairs are performed, both bus wires must have the same length. When twisting the wires -1- and -2- together, the length of each complete twist must be A = 20 mm.
- It must be ensured that no part of the wiring, including wiring in the vicinity of crimp connectors -arrow-, is longer than B = 50 mm without the wires being twisted.
- Mark the area of repair with yellow insulation tape to make it easy to identify.

2.4.5 Notes on replacement of aerial cables

A new repair concept has been developed for repair work on aerial wires. Now connecting wires in different lengths and various adapter cables are available as replacement parts instead of a complete aerial wire.

Copyright by Volkswagen AG. Volkswagen AG does not guarantee or accept any liability with respect to the correctness of information in this document. Copying for private or commercial purposes, in part or in whole, is not permitted unless authorised by Volkswagen AG.

Downloaded from www.Manualslib.com manuals search engine

General description

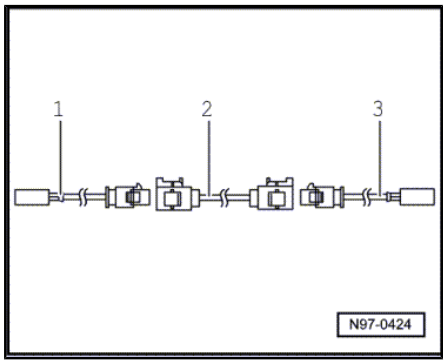

- Aerial wires must not be repaired, but if repair is required, they must be replaced only by connecting wires and adapter cables offered as genuine parts.
- The replacement parts can be found in the ⇒ electronic parts catalogue “(ETKA)” .
- These genuine parts are suitable for all aerial wires and wire diameters which may need to be replaced.
- The connector housings for aerial cables are only available as replacement parts in one colour. However, they can be used for all colours of aerial connector.
- No provision has been made for replacement of individual aerial connectors in the event of repair.
- The wires can be used retroactively for all VW vehicles, with all installed aerial wire diameters.
- All adapter and connection wires are suitable for all transmitter and receiver signals.
- This repair method can also be used for testing or retrofitting.

Assembly overview - aerial wire

Example: aerial wire between radio -R- and aerial -R11- is defective. The following wires are required for the repair:

1 - Adapter cable for connecting to the radio -R- . Length approx. 30 cm.

2 - Connecting wire available in different lengths.

3 - Adapter cable for connection to the aerial -R11- . Length approx. 30 cm.

Installing a new aerial wire

Note

Note that the total length of an aerial wire, depending on vehicle equipment level, can be divided into sections by aerial selection control unit -J515- , control unit for traffic information -J559- or aerial amplifier -R24- . Only the defective section of aerial wire must be replaced.

Carry out following procedures:

– Pull defective aerial wire connections off units.

– Determine the routing of the defective aerial wire in vehicle and measure the total length of the aerial connecting wire to be replaced.

Protected by copyright. Copying for private or commercial purposes, in part or in whole, is not permitted unless authorised by Volkswagen AG. Volkswagen AG does not guarantee or accept any liability with respect to the correctness of information in this document. Copyright by Volkswagen AG.

Downloaded from www.Manualslib.com manuals search engine

The total length of aerial connecting wire is the sum of the length of adapter cables required -1- and -3- and the connecting wire -2-.

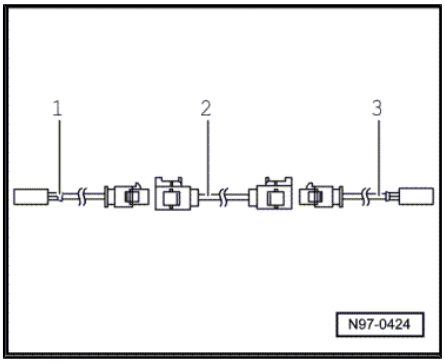

– To determine the length of connecting wire required, subtract 60 cm from the measured total length of aerial connecting wire -2-.
– Procure the required adapter cables -1- and -3- and connecting wire -2- at length calculated as genuine part from the parts catalogue.
– Cut off connectors of defective aerial wire.

The remainder of the defective aerial wire remains in the vehicle.

– Connect adapter cables -1- and -3- to equipment in vehicle.
– Route and attach the connection line -2- in the immediate vicinity of the factory routing.

Note

Do not kink or excessively bend aerial wires! The bending radius must not be below 50 mm.

– Connect connecting wire to adapter cables.
– Perform a functional check.

2.4.6 Repairs to wiring with cross sections up to 0.35 mm²

For repairs to wiring with cross sections up to 0.35 mm², it is essential that contacts are crimped on using crimping pliers for JPT contacts -VAS 1978/9A- or crimping pliers (base tool) -VAS 1978/1-2- with attached head adapter for JPT contacts -VAS 1978/9-1- . Due to the low current strength of these wires in the micro and thousandths range, incorrectly crimped contacts cause electrical resistance and result in faults or failure in the respective system. The most common applications of these contacts are:

- Lambda probe
- Engine speed sender
- Air mass meter

With the use of crimping pliers for JPT contacts -VAS 1978/9A- or crimping pliers (base tool) -VAS 1978/1-2- with attached head adapter for JPT contacts -VAS 1978/9-1- , the correct connection between crimp contact, wire and single wire seal is assured. The tool is only to be used for the application described.

Note

Crimped to the repair wiring are normal contacts and gold-plated contacts. The repair contact must always be the same type as the contact installed in the factory.

Crimping on new contact with single wire seal

– Insert head adapter for JPT contacts -VAS 1978/9-1- in crimping pliers (base tool) -VAS 1978/1-2- ⇒ page 89 .

Protected by copyright. Copying for private or commercial purposes, in part or in whole, is not permitted unless authorised by Volkswagen AG. Volkswagen AG does not guarantee or accept any liability with respect to the correctness of information in this document. Copyright by Volkswagen AG.

Downloaded from www.Manualslib.com manuals search engine

– Attach the single wire seal to the repair wire.

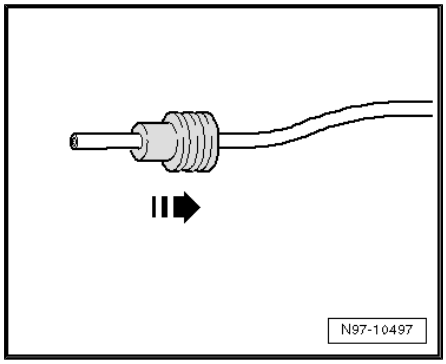

Note

When doing this, the small diameter of the single wire seal must face the contact to be crimped on.

– Open the crimping pliers (base tool) -VAS 1978/1-2- and insert the end of the repair wire in the opening of the crimping pliers (base tool) -VAS 1978/1-2- .

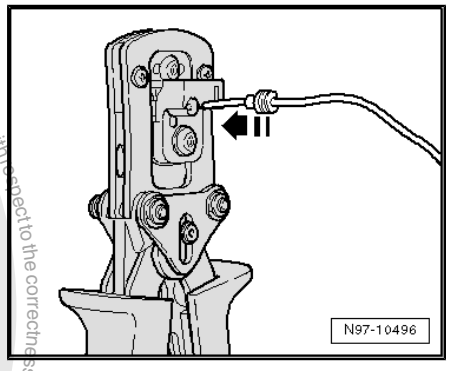

– Close the crimping pliers (base tool) -VAS 1978/1-2- completely.

– Open the crimping pliers (base tool) -VAS 1978/1-2- and remove the stripped wire end.

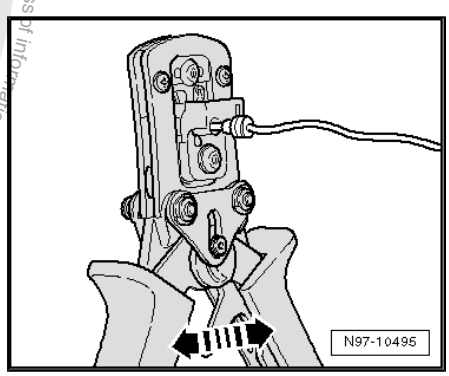

– Push the single wire seal towards the stripped wire end until it is flush with the wiring insulation.

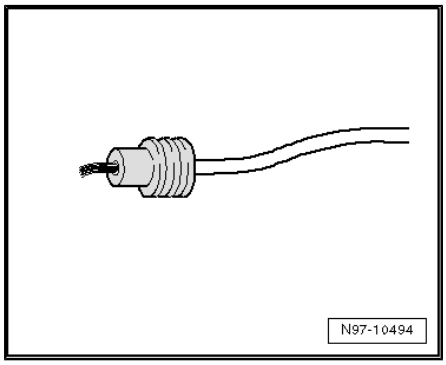

Protected by copyright. Copyright for private or commercial purposes, in part or in whole, is not permitted unless authorised by Volkswagen AG. Volkswagen AG does not guarantee or accept any liability with respect to the correctness of information in this document. Copyright by Volkswagen AG.

Downloaded from www.Manualslib.com manuals search engine

Protected by copyright. Copying for private or commercial purposes, in part or in whole, is not permitted unless authorised by Volkswagen AG. Volkswagen AG does not guarantee or accept any liability with respect to the correctness of information in this document. Copyright by Volkswagen

– Insert the new crimp contact in the mounting of the crimping pliers (base tool) -VAS 1978/1-2- .

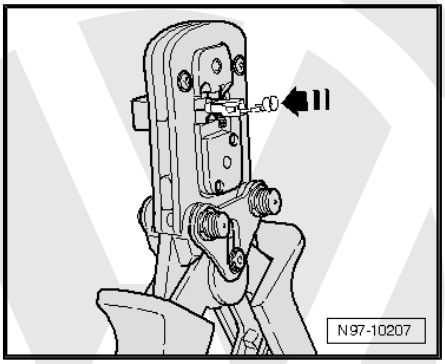

– Insert the stripped wire end with the positioned single wire seal in the crimp contact until it comes into contact with the “wire stop”.
– Crimp the contact, wire and single wire seal by closing the crimping pliers (base tool) -VAS 1978/1-2- fully.
– Open the crimping pliers (base tool) -VAS 1978/1-2- again and remove the successfully crimped contact.

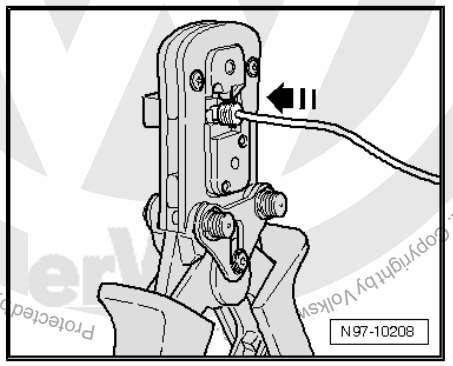

Successful crimping can be identified by clean and equal application of pressure on the wire and single wire seal in the contact and by a stamp on the rear that indicates the correct tool was used in the correct manner to carry out the crimping process.

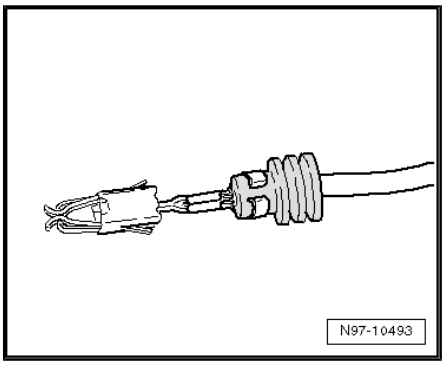

2.4.7 Wiring open circuit with one repair position

Repair position with single crimp connector

– Place the wire to be repaired to one side (about 20 cm either side of the repair position).
– If necessary, unbind the wiring harness using the folding knife.

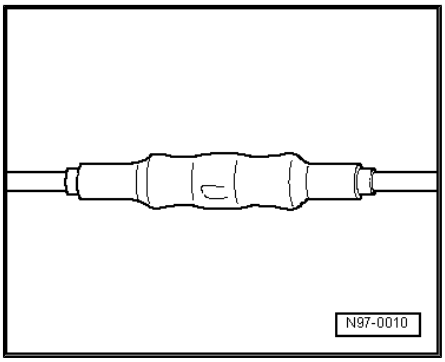

Downloaded from www.Manualslib.com manuals search engine

– Cut out the damaged piece of wiring using the wire strippers -VAS 1978/3- .

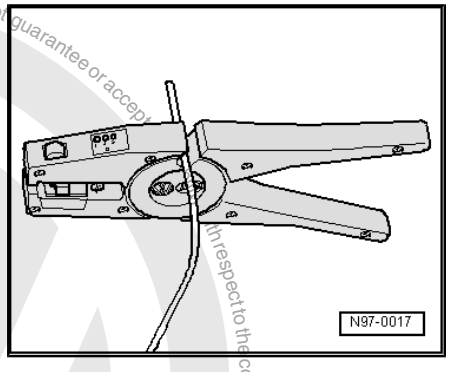

Note

If, after the damaged wire has been cut out, both ends of the vehicle's own wiring are too short for a repair using single crimp connectors, use a piece of repair wire of the appropriate length with two crimp connectors ⇒ page 100 .

– Strip the wire ends of insulation by 6 to 7 mm using the wire strippers -VAS 1978/3- .

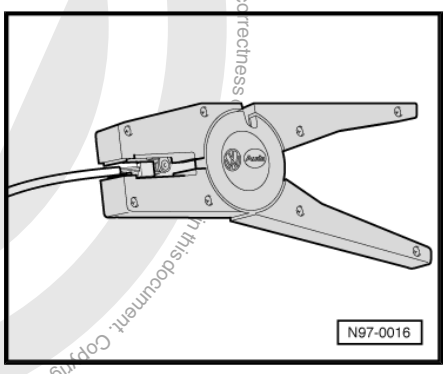

– Push the crimp connector on both stripped wire ends of the vehicle's own single wire and crimp it on using the crimping pliers (base tool) -VAS 1978/1A- .

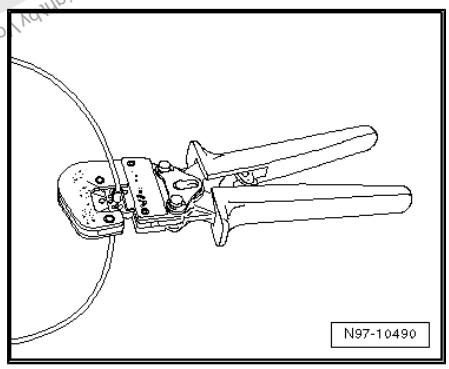

Note

- *Ensure without fail that the correct crimp recess is chosen for the crimp connectors being used* ⇒ page 86 .
- *The insulation on the wires must not be crimped.*

After crimping, the crimp connector has to be shrink fitted using the hot air blower, 220 V/50 Hz -VAS 1978/14- in order to prevent any ingress of moisture.

– Place shrink element for hot air blower -VAS 1978/15- on hot air blower, 220 V/50 Hz -VAS 1978/14- .

– Heat up the crimp connector using the hot air blower -VAS 1978/14- along a straight line, working from the middle outwards, until it is sealed completely and the adhesive escapes from the ends.

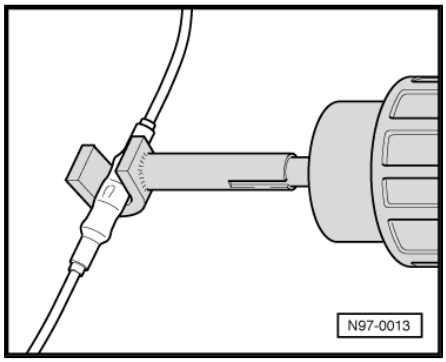

Caution

When shrink-fitting, take care not to damage any other wiring, plastic parts or insulating material with the hot air blower, 220 V/50 Hz -VAS 1978/14- .

Observe ⇒ Operating instructions for hot air blower, 220 V/50 Hz -VAS 1978/14- .

Downloaded from www.Manualslib.com manuals search engine

Protected by copyright. Copying for private or commercial purposes, in part or in whole, is not permitted unless authorised by Volkswagen AG. Volkswagen AG does not guarantee or accept any liability with respect to the correctness of information in this document. Copyright by Volkswagen AG.

Note

- *Ensure that, where several wires have to be repaired, the crimp connectors are not directly adjacent to each other. To prevent the circumference of the wiring harness from becoming to great, position the crimp connectors so they are offset slightly.*
- *If the repair position was already wrapped, this section has to be wrapped again with yellow insulation tape once the repair has been carried out.*
- *Attach the repaired wiring harness with a cable tie to prevent it from generating noise when the vehicle is in motion.*

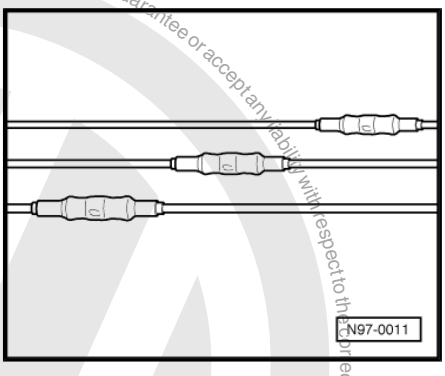

2.4.8 Wiring open circuit with two repair positions

Repair position with interlinked wire.

– Place the wire to be repaired to the side at two points (about 20 cm to both sides of the relevant repair position).

– Unbind the wiring harness using the folding knife.

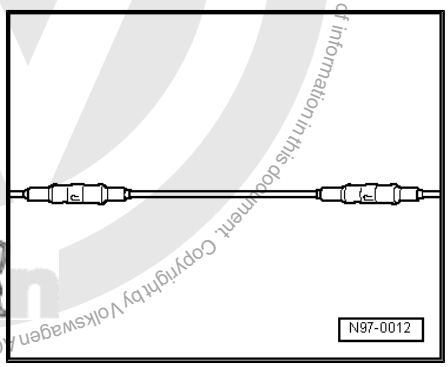

– Place the yellow repair wire next to the damage wiring harness and, using wire strippers -VAS 1978/3- , cut the repair wire to the required length.

– Cut the damaged section of wire out of the vehicle's own single wire.

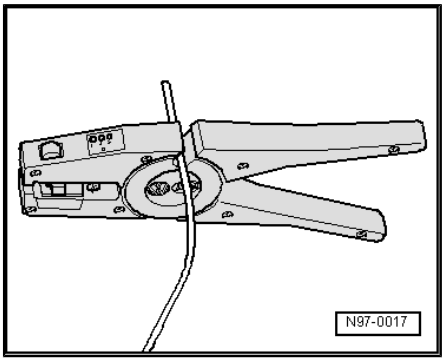

– Strip the wire ends of insulation by 6 to 7 mm using the wire strippers -VAS 1978/3- .

– Push the crimp connector onto one side of the vehicle's own single wire and on the other side onto the repair wire.

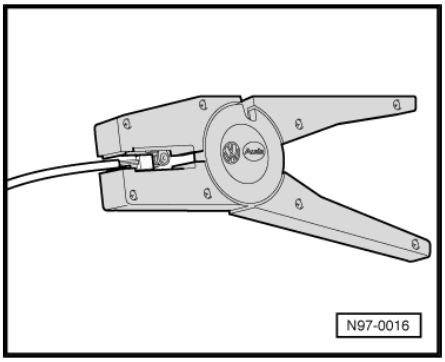

Downloaded from www.Manualslib.com manuals search engine

– Crimp the connector using the crimping pliers -VAS 1978/1A- to both wire ends.

– Repeat this procedure on the other end of the repair wire.

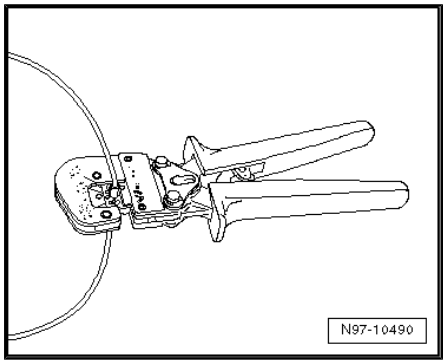

Note

- *Ensure without fail that the correct crimp recess is chosen for the crimp connectors being used* ⇒ page 86 .
- *The insulation on the wires must not be crimped.*

After crimping, the crimp connector has to be shrink fitted using the hot air blower, 220 V/50 Hz -VAS 1978/14- in order to prevent any ingress of moisture.

– Place shrink element for hot air blower -VAS 1978/15- on hot air blower, 220 V/50 Hz -VAS 1978/14- .

– Heat up the crimp connector using the hot air blower -VAS 1978/14- along a straight line, working from the middle outwards, until it is sealed completely and the adhesive escapes from the ends.

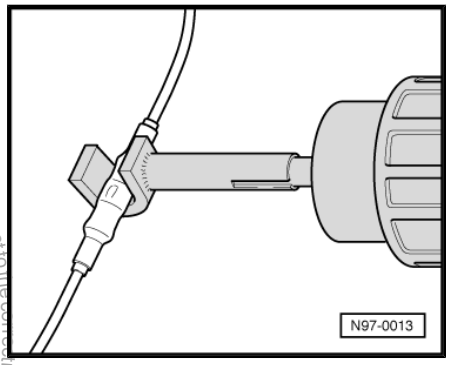

Caution

When shrink-fitting, take care not to damage any other wiring, plastic parts or insulating material with the hot air blower, 220 V/50 Hz -VAS 1978/14- .

Observe ⇒ Operating instructions for hot air blower, 220 V/50 Hz -VAS 1978/14- .

Note

- *Ensure that, where several wires have to be repaired, the crimp connectors are not directly adjacent to each other. To prevent the circumference of the wiring harness from becoming to great, position the crimp connectors so they are offset slightly.*
- *If the repair position was already wrapped, this section has to be wrapped again with yellow insulation tape once the repair has been carried out.*
- *Attach the repaired wiring harness with a cable tie to prevent it from generating noise when the vehicle is in motion.*

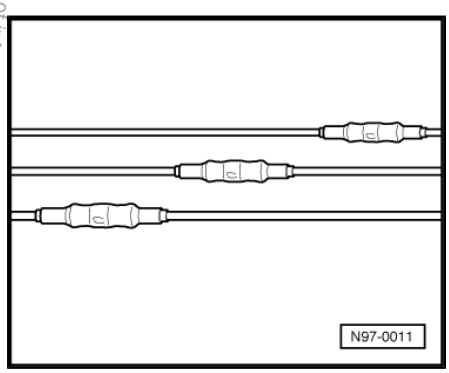

2.5 Repairs to contact housings and connectors

2.5.1 Notes on repairs to contact housings and connectors

- Observe the general notes on repairs to the vehicle electrical system ⇒ page 90 .
- Allocation of the appropriate crimp contacts to the contact housings is by way of the part number stamped on the contact housing. Listed in illustration 198 (electrical connecting elements) in ⇒ Electronic parts catalogue “(ETKA)” are the part

Downloaded from www.Manualslib.com manuals search engine

numbers for the contact housings in conjunction with the associated crimp contacts.

- Damaged contact housings must always be replaced.
- New contact housings can be ordered from the OTC in Kassel.

2.5.2 Repairs to contacts in contact housings

Carry out following procedures:

– First, open or disengage the secondary locking mechanism of the contact housing ⇒ page 105 .

– Disengage the contact (primary locking mechanism) using the appropriate release tool ⇒ page 105 .

– Pull the contact by the single wire out of the contact housing.

– Select the yellow repair wire with the correct contact from the wiring harness repair set -VAS 1978- / wiring harness repair set -VAS 1978A- / wiring harness repair set -VAS 1978 B- .

– Place the wire to be repaired from the vehicle's own wiring harness to one side (about 20 cm either side of the repair position).

– If necessary, unbind the wiring harness using the folding knife.

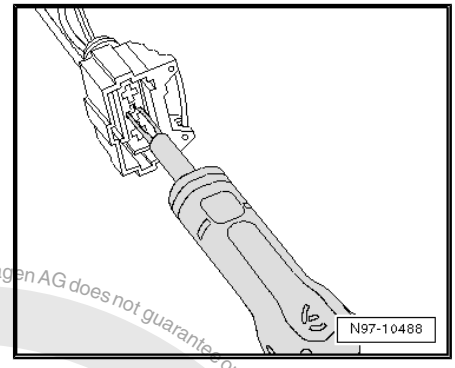

– Push the new contact of the repair wire into the contact housing until it engages.

– Slide the single wire seal onto the repair wire.

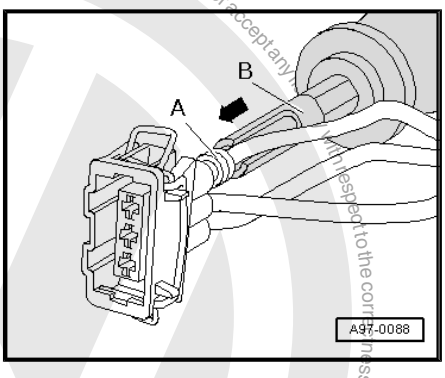

Note

The small diameter of the single wire seal must face the contact housing.

– Slide the single wire seal into the contact housing using the correct assembly tool ⇒ page 103 .

– Trim the repair wire and the single wire of the vehicle's own wiring harness accordingly using wire strippers -VAS 1978/3- .

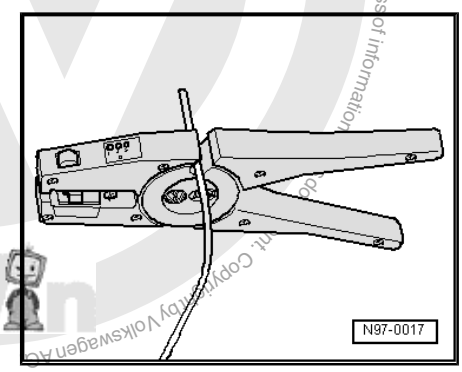

Protected by copyright. Copying for private or commercial purposes, in part or in whole, is not permitted unless authorised by Volkswagen AG. Volkswagen AG does not guarantee or accept any liability with respect to the correctness of information in this document. Copyright by Volkswagen AG.

Downloaded from www.Manualslib.com manuals search engine

– Strip the 6 - 7 mm of insulation from the end of the repair wire and the vehicle's own single wire using the wire strippers -VAS 1978/3- .

– Crimp the stripped ends of the repair wire and single wire of the vehicle's own wiring harness using the crimping pliers -VAS 1978/1A- and a crimp connector, as described in the chapter entitled “Wiring open circuit with one repair position” ⇒ page 98 .

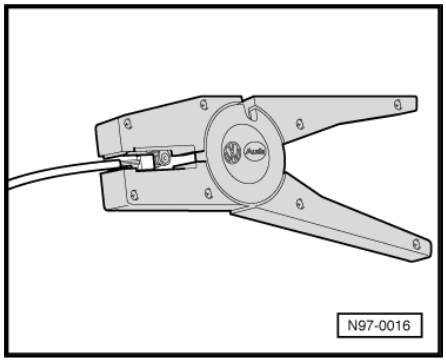

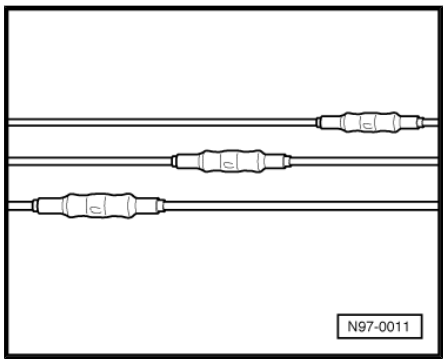

Note

- *Ensure that, where several wires have to be repaired, the crimp connectors are not directly adjacent to each other. To prevent the circumference of the wiring harness from becoming to great, position the crimp connectors so they are offset slightly.*
- *If the repair position was already wrapped, this section has to be wrapped again with yellow insulation tape once the repair has been carried out.*
- *Attach the repaired wiring harness with a cable tie to prevent it from generating noise when the vehicle is in motion.*

2.5.3 Fitting single wire seals

Note

- *Single wire seals prevent the ingress of moisture and dirt in the contact housing. They are installed in the engine compartment and must always be reinstalled following repairs.*
- *As standard, the single wire seal is crimped together with the contact on the wire; this is not the case with the repair wires. Before crimping the repair line, the single wire seal must therefore first be pushed onto the wire.*
- *It is essential that the single wire seals are of the correct size to fit the cross section of the repair wire. The outer diameter of the single wire seal is based on the socket diameter of the contact housing. Only carry out the repair using the correct assembly tool.*

Installing the single wire seal

– Disengage the contact locking mechanism using the appropriate release tool -A- and then pull the wire with the single wire seal backwards -arrow- out of the contact housing.

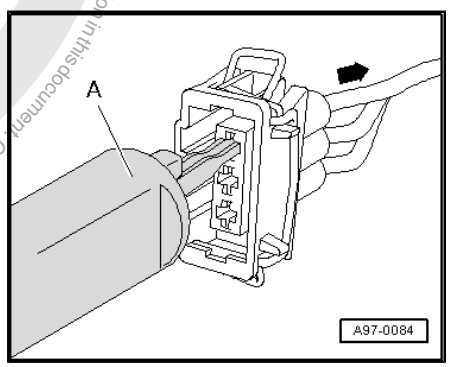

Protected by copyright. Copying for private or commercial purposes, in part or in whole, is not permitted unless authorised by Volkswagen AG. Volkswagen AG does not guarantee or accept any liability with respect to the correctness of information in this document. Copyright by Volkswagen AG.

Downloaded from www.Manualslib.com manuals search engine

– Cut off the old contact with the single wire seal from the vehicle's own wiring harness.

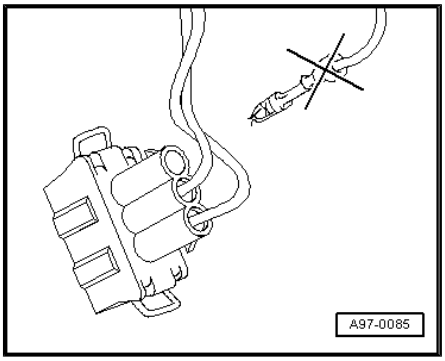

– Slide the repair wire with the new contact in the respective socket of the contact housing until it engages -arrow-.

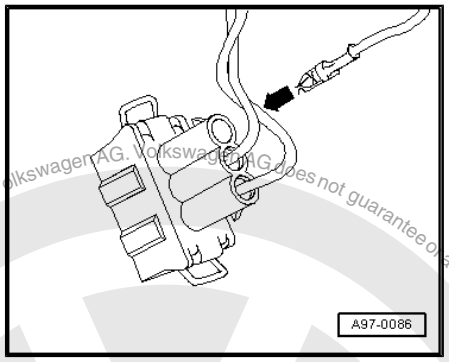

– Place the single wire seal -A- on the free end of the repair wire.

Note

The small diameter of the single wire seal must face the contact housing.

– Slide the single wire seal -A- on the repair wire until it reaches the contact housing -arrow-.

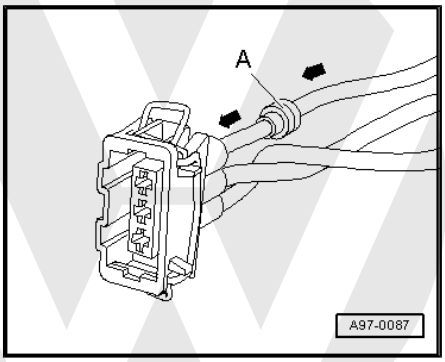

– Slide the single wire seal -A- using the respective assembly tool -B- fully into the contact housing.

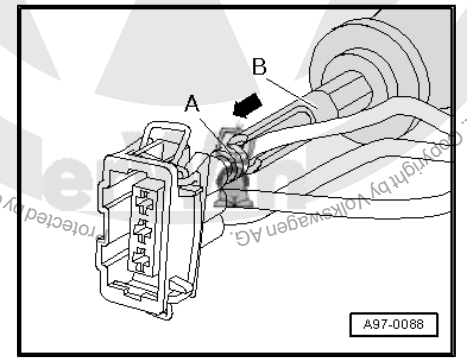

Protected by copyright. Copying for private or commercial purposes, in part or in whole, is not permitted unless authorised by Volkswagen AG. Volkswagen AG does not guarantee or accept any liability with respect to the correctness of information in this document. Copyright by Volkswagen AG

Downloaded from www.Manualslib.com manuals search engine

– Trim the repair wire and the single wire of the vehicle's own wiring harness accordingly using wire strippers -VAS 1978/3- .

– Crimp the stripped ends of the repair wire and single wire of the vehicle's own wiring harness using the crimping pliers -VAS 1978/1A- and a crimp connector, as described in the chapter entitled “Wiring open circuit with one repair position” ⇒ page 98 .

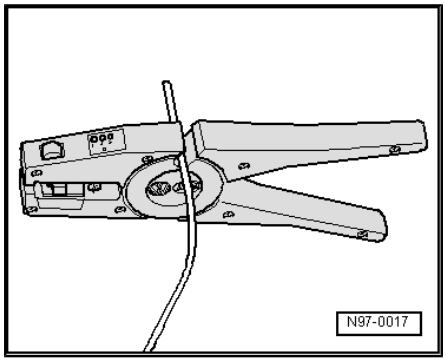

2.5.4 Repairs to contact housings using cut and clamp technique

Note

- *For technical reasons, the contact housings for cut and clamp technique can only be supplied with the cut and clamp contacts inserted.*
- *These contacts can be removed just like any other contact housing if they are not needed.*
- *Repair wires can be supplied that already have the appropriate contacts crimped on ⇒ Electronics parts catalogue “(ETKA)” .*

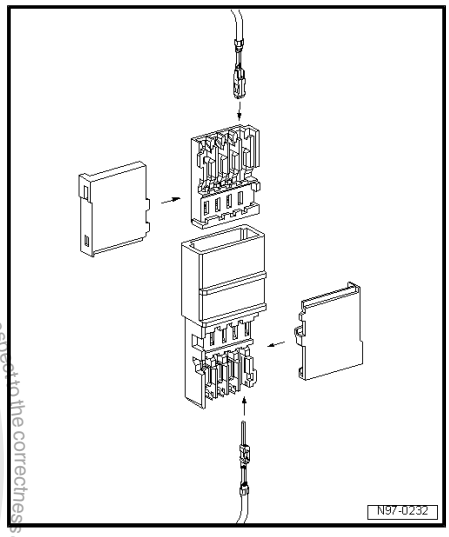

2.6 Releasing and dismantling contact housings

2.6.1 Notes on releasing and dismantling contact housings

- Observe the general notes on repairs to the vehicle electrical system ⇒ page 90 .
- To release, always use the correct release tools. Under no circumstances should the contacts be pulled out of the contact housings with force.
- Damaged contact housings must always be replaced. New contact housings can be ordered from the OTC in Kassel.
- As an aid to disengage the secondary locking mechanisms, a small screwdriver can be used.
- The socket/pin assignment can be found stamped on the secondary locking mechanism or on the rear of the contact housing.
- For more detailed information about the locations of connectors, see ⇒ Current flow diagrams, Electrical fault finding and Fitting locations.

Copyright by Volkswagen AG. Volkswagen AG does not guarantee or accept any liability with respect to the correctness of information in this document. Copying for private or commercial purposes, in part or in whole, is not permitted unless authorised by Volkswagen AG.

Downloaded from www.Manualslib.com manuals search engine

Protected by copyright. Copying for private or commercial purposes, in part or in whole, is not permitted unless authorised by Volkswagen AG. Volkswagen AG does not guarantee or accept any liability with respect to the correctness of information in this document. Copyright by Volkswagen AG.

Allocation of the correct release tool to the respective locking devices can be gleaned from the table in the ⇒ operating instructions of -VAS 1978/35- .

2.6.2 Secondary locking element

The secondary locking mechanism is a housing catch (second line locking mechanism) that secures all the wires in one contact housing. If a secondary locking mechanism is fitted to a contact housing, this must always be opened or removed using the appropriate tool before releasing and pulling out individual crimp contacts.

The secondary locking mechanism is different in colour from the rest of the contact housing. This makes it easier to identify the secondary locking mechanism and clarifies its intended function.

The types of contact housing shown here are just a few examples to show the different functions of secondary locking mechanism.

Example 1

The housing catch is disengaged by removing a “toothed element” -arrow-.

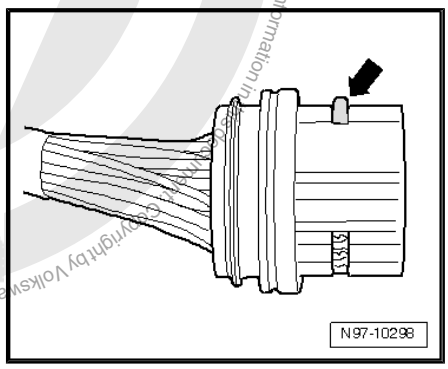

Example 2

The housing catch is disengaged by opening a “flap” -arrow-.

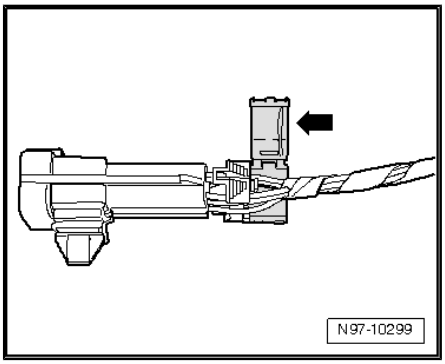

Example 3

The housing catch can be disengaged by detaching a “slide” -arrow-.

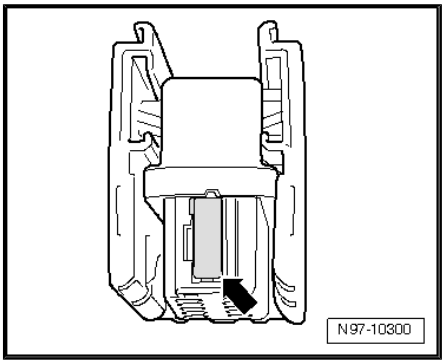

2.6.3 Primary locking element

The primary locking mechanism is what fixes an individual crimp contact in the contact housing.

If necessary, any housing catches in place (secondary locking mechanisms) must be released or removed prior to disengaging the contacts using the prescribed tool ⇒ page 106 .

Downloaded from www.Manualslib.com manuals search engine

The types of primary locking mechanisms shown as follows are just a few examples to show the different functions of primary locking mechanism.

- Round connector systems ⇒ page 107
- Flat connector systems ⇒ page 108
- Special connector systems ⇒ page 109

The assignment of the correct release tool to the respective locking device is indicated by the table in the ⇒ operating instructions of -VAS 1978/35- .

2.6.4 Round connector systems

Any housing catches in place (secondary locking mechanisms) must be released or removed prior to disengaging the contacts using the prescribed tool ⇒ page 106 .

– Insert the release tool appropriate for the contact housing in the release port of the contact housing.

– Grab hold of the contact by the wire and push it lightly into the contact housing -arrow-.

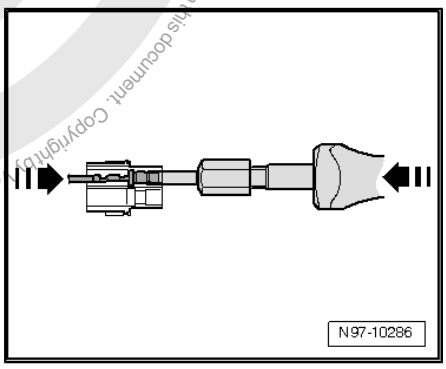

Note

By pushing the contact in the direction of the contact housing, the locking tabs of the contact are lifted up by the housing edge and can be disengaged using the release tool.

– At the same time, push the release tool in the direction of the contact housing -arrow- and pull out the released contact from the contact housing.

– The release tool can be pulled out of the contact housing again once the contact has been removed.

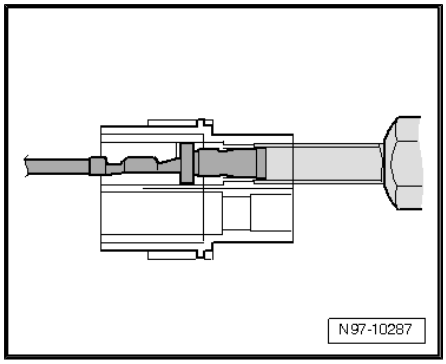

Downloaded from www.Manualslib.com manuals search engine

2.6.5 Flat connector systems

Any housing catches in place (secondary locking mechanisms) must be released or removed prior to disengaging the contacts using the prescribed tool ⇒ page 106 .

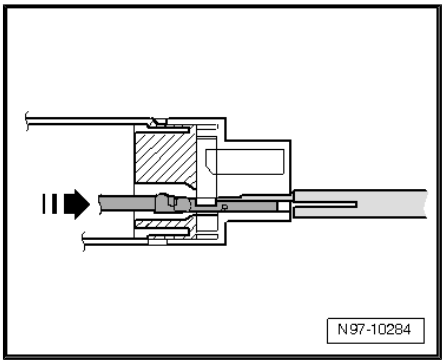

Flat connector with one locking tab

– Insert the release tool appropriate for the contact housing in the release port of the contact housing.

– Grab hold of the contact by the wire and push it lightly into the contact housing -arrow-.

Note

By pushing the contact in the direction of the contact housing, the locking tab of the contact is lifted up by the housing edge and can be disengaged using the release tool.

– At the same time, push the release tool in the direction of the contact housing and pull out the released contact from the contact housing -arrow-.

– The release tool can be pulled out of the contact housing again once the contact has been removed.

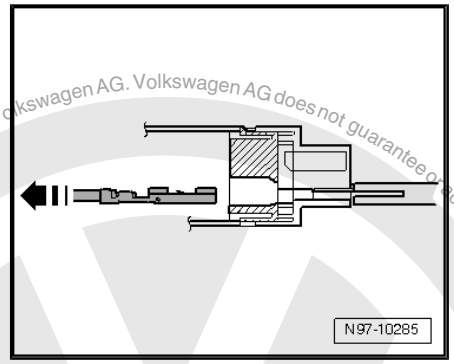

Flat connector with two locking tabs

– Insert the release tool appropriate for the contact housing in the release port of the contact housing.

– Grab hold of the contact by the wire and push it fully into the contact housing -arrow-.

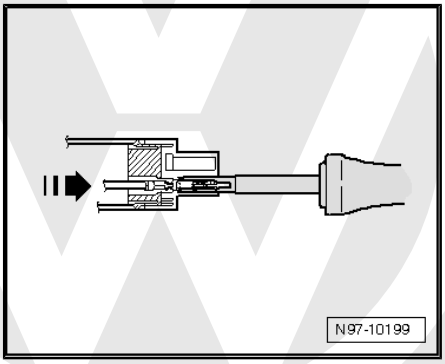

Note

By pushing the contact in the direction of the contact housing, the locking tabs of the contact are lifted up by the housing edge and can be disengaged using the release tool.

– At the same time, push the release tool in the direction of the contact housing and pull out the released contact from the contact housing -arrow-.

– The release tool can be pulled out of the contact housing again once the contact has been removed.

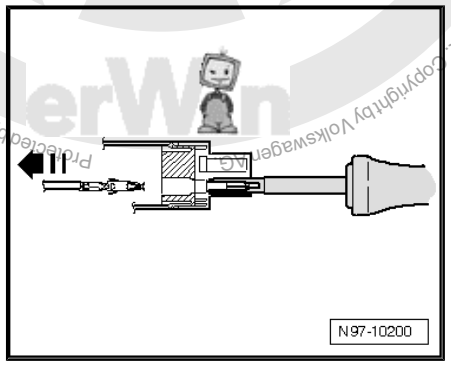

Asymmetrical

Volkswagen AG. Volkswagen AG does not guarantee or accept any liability with respect to the correctness of information in this document. Copyright by Volkswagen AG. Protected by copyright. Copying for private or commercial purposes, in part or in whole, is not permitted unless authorised by Volkswagen AG.

Downloaded from www.Manualslib.com manuals search engine

– Insert the release tool appropriate for the contact housing in the release port of the contact housing.

– Grab hold of the contact by the wire and push it lightly into the contact housing -arrow-.

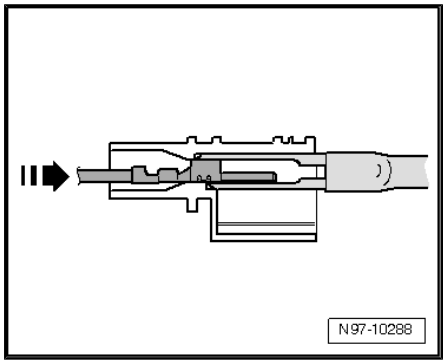

Note

By pushing the contact in the direction of the contact housing, the locking tabs of the contact are lifted up by the housing edge and can be disengaged using the release tool.

– At the same time, push the release tool in the direction of the contact housing and pull out the released contact from the contact housing -arrow-.

– The release tool can be pulled out of the contact housing again once the contact has been removed.

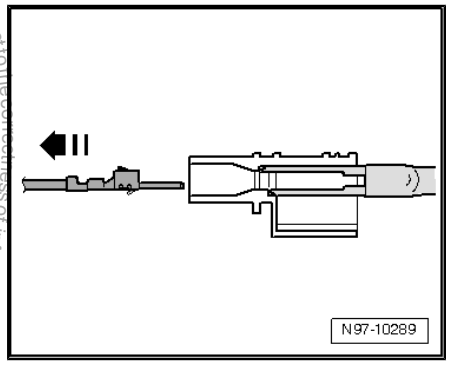

2.6.6 Special connector systems

Any housing catches in place (secondary locking mechanisms) must be released or removed prior to disengaging the contacts using the prescribed tool ⇒ page 106 .

Faston contacts

– Insert the release tool appropriate for the contact housing in the release port of the contact housing -arrow-.

– Grab hold of the contact by the wire and push it lightly into the contact housing.

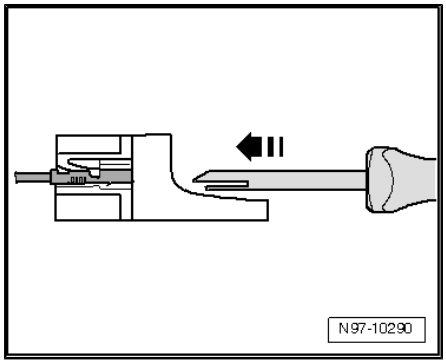

Note

By pushing the contact in the direction of the contact housing, the locking tabs of the contact are lifted up by the housing edge and can be disengaged using the release tool.

– At the same time, push the release tool in the direction of the contact housing and pull out the released contact from the contact housing -arrow-.

– The release tool can be pulled out of the contact housing again once the contact has been removed.

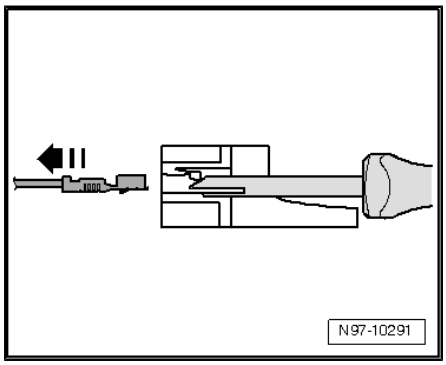

GT 150/280 contacts

Protected by copyright. Copying for private or commercial purposes, in part or in whole, is not permitted unless authorised by Volkswagen AG. Volkswagen AG does not guarantee or accept any liability with respect to the correctness or information in this document.

Downloaded from www.Manualslib.com manuals search engine

– Insert the release tool appropriate for the contact housing under the locking tab into the contact housing.
– Push the tool onto the limit stop -arrow- in the contact housing.

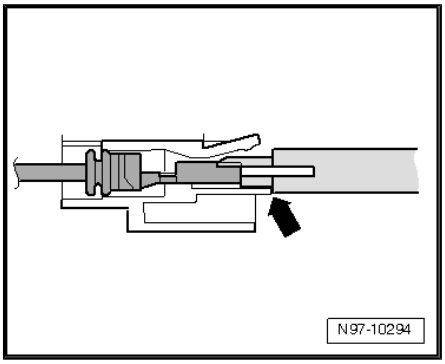

The contact is ejected from the contact housing.

– The release tool can be pulled out of the contact housing again once the contact has been ejected.

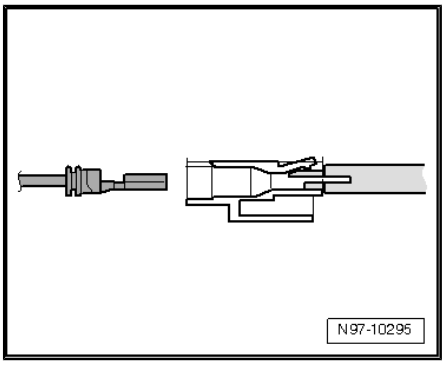

Contacts without locking tabs

– Insert the release tool under the locking tab of the contact housing.
– Push through the release tool with a light upward movement -arrow- onto the limit stop.

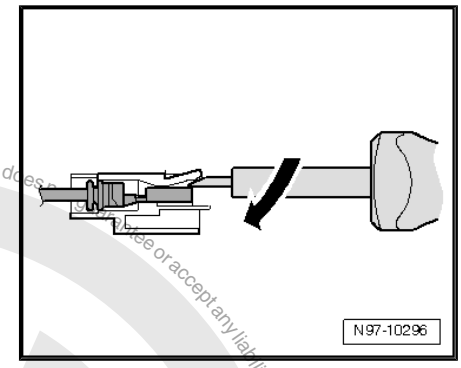

The contact is ejected from the contact housing.

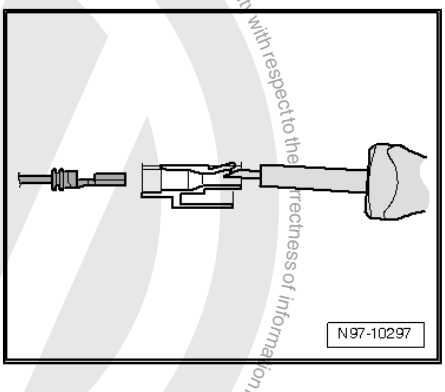

Protected by copyright. Copying for private or commercial purposes, in part or in whole, is not permitted unless authorised by Volkswagen AG. Volkswagen AG does not guarantee or accept any liability with respect to the correctness of information in this document. Copyright by Volkswagen AG.

Downloaded from www.Manualslib.com manuals search engine

3 Contact surface cleaning set -VAS 6410-

3.1 Using the contact surface cleaning set -VAS 6410-

The contact surface cleaning set -VAS 6410- allows optimal repair quality to be achieved in the area of vehicle electrics. The tools allow performing repair work in the area of the sensor in wiring harnesses for threaded connections in the high-current circuit (starting and charging current). The easy-to-use contact surface cleaning set -VAS 6410- has been designed to match the structural design of the vehicles and ensures that repairs are carried out correctly.

Note

The illustrations shown here are just a few examples of repair work.

Contact surface cleaning set -VAS 6410-

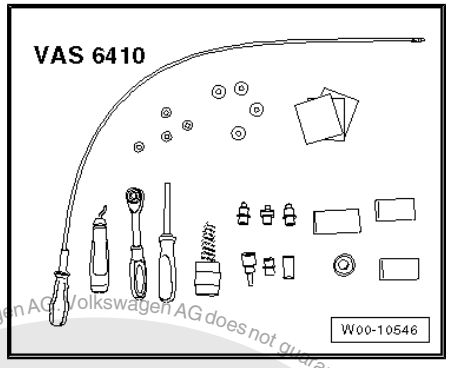

3.1.1 Repairing ring terminals

Special tools and workshop equipment required

- Torque wrench -V.A.G 1331-

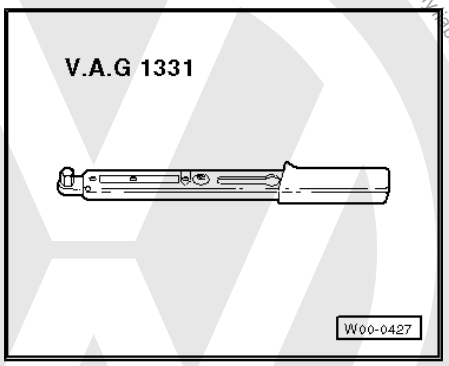

Note

- *The use of penetrating fluid, contact spray or grease is prohibited since the lack of adhesion in the threads may cause a torque excess and, therefore, the breaking of the threaded connection.*
- *The grey sanding pads are suitable for light dirt and "soft surfaces". The red sanding pads are suitable for heavy dirt and "hard surfaces".*

Protected by copyright. Copying for private or commercial purposes, in part or in whole, is not permitted unless authorised by Volkswagen AG. Volkswagen AG does not guarantee or accept any liability with respect to the correctness of information in this document. Copyright by Volkswagen AG.

Downloaded from www.Manualslib.com manuals search engine

WARNING

Danger of injury! Observe warning notices and safety regulations ⇒ page 2 !

Carry out following procedures:

- Disconnect the battery -A- ⇒ Electrical system; Rep. Gr. 27 .
- Loosen cap nut and remove ring terminal from threaded connection.
- Check ring terminal for corrosion and dirt.
- Select suitable adapter and suitable sanding pad.

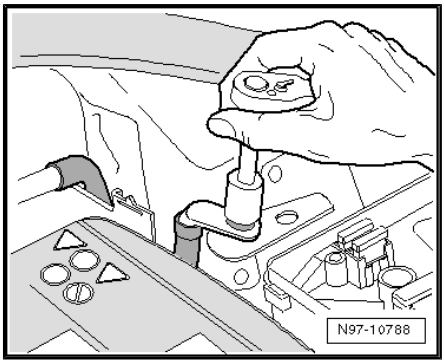

Note

As an alternative, the sanding block may also be used.

Caution

Take care not to abrade excessively the tin coating and ensure that the copper does not appear. This could produce a galvanic cell which destroys metal and causes faulty repair.

Note

As the thickness of the tin coating may differ according to the design, the cleaning process must be performed step by step and a visual check of the ring terminal is necessary between the steps.

- Insert adapter into ring terminal and grind off corrosion and dirt with circular movements.
- Check ring terminal and regrind it.

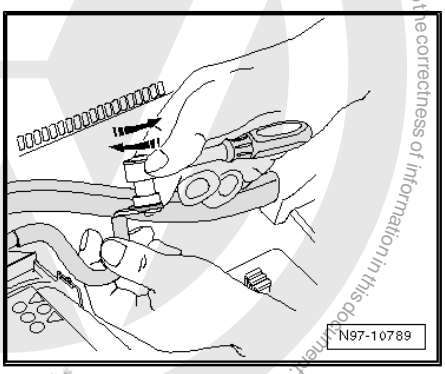

Protected by copyright. Copyright for private or commercial purposes, in part or in whole is not permitted unless authorized by Volkswagen AG. Volkswagen AG does not guarantee or accept any liability with respect to the correctness of information in this document. Copyright by Volkswagen AG.

Downloaded from www.Manualslib.com manuals search engine

– Remove punching burr on ring terminal using the deburrer.
– Tighten ring terminal to specified torque ⇒ Electrical system; Rep. Gr. 27 .

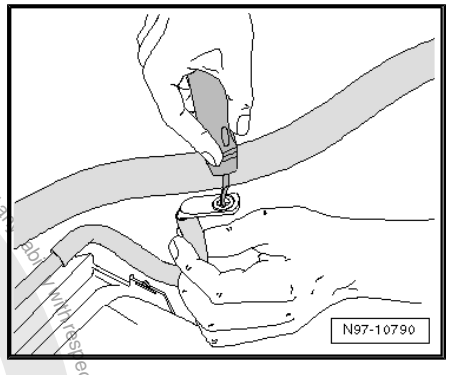

Note

Optimum contact is ensured when the components to be secured are tightened to the specified torque after cleaning.

– Apply suitable anti-corrosion treatment to connection ⇒ page 115 .
– Reconnect the battery -A- ⇒ Electrical system; Rep. Gr. 27 .

WARNING

Danger of injury! Observe warning notices and safety regulations ⇒ page 2 !

3.1.2 Repairing threaded connections

Special tools and workshop equipment required

♦ Torque wrench -V.A.G 1331-

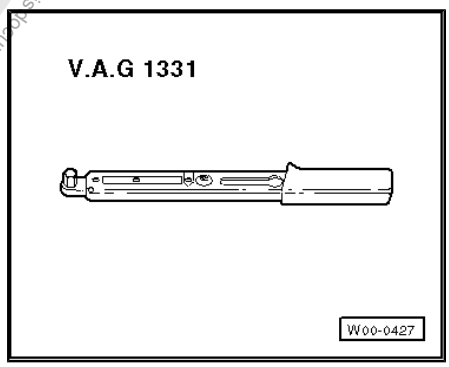

Note

♦ *The use of penetrating fluid, contact spray or grease is prohibited since the lack of adhesion in the threads may cause a torque excess and, therefore, the breaking of the threaded connection.*

♦ *The grey sanding pads are suitable for light dirt and "soft surfaces". The red sanding pads are suitable for heavy dirt and "hard surfaces".*

WARNING

Danger of injury! Observe warning notices and safety regulations ⇒ page 2 !

Carry out following procedures:

– Disconnect the battery -A- ⇒ Electrical system; Rep. Gr. 27 .

Protected by copyright. Copying for private or commercial purposes, in part or in whole, is not permitted unless authorised by Volkswagen AG. Volkswagen AG does not guarantee or accept any liability with respect to the correctness of information in this document. Copyright by Volkswagen AG.

Downloaded from www.Manualslib.com manuals search engine

– Loosen cap nut and remove ring terminal from threaded connection.
– Check threaded connection for corrosion and dirt.
– Select suitable adapter and suitable sanding pad for threaded connection.

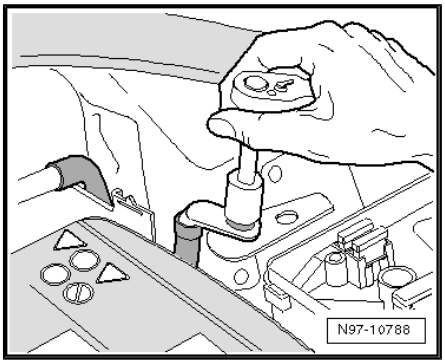

Caution

Take care not to abrade excessively the tin coating and ensure that the copper does not appear. This could produce a galvanic cell which destroys metal and causes faulty repair.

Note

As the thickness of the tin coating may differ according to the design, the cleaning process must be performed step by step and a visual check of the ring terminal is necessary between the steps.

– Set adapter on threaded connection and grind off corrosion and dirt with circular movements.
– Check threaded connection and regrind it if necessary.
– Tighten connection and locating element again to specified torque ⇒ Electrical system; Rep. Gr. 27 .

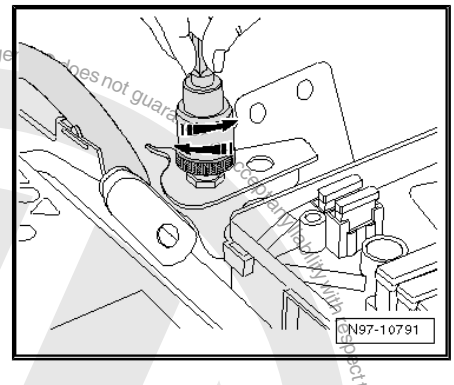

Note

Optimum contact is ensured when the components to be secured are tightened to the specified torque after cleaning.

– Apply suitable anti-corrosion treatment to threaded connection ⇒ page 115 .
– Reconnect the battery -A- ⇒ Electrical system; Rep. Gr. 27 .

WARNING

Danger of injury! Observe warning notices and safety regulations ⇒ page 2 !

3.1.3 Cleaning battery terminals

Special tools and workshop equipment required

♦ Torque wrench -V.A.G 1331-

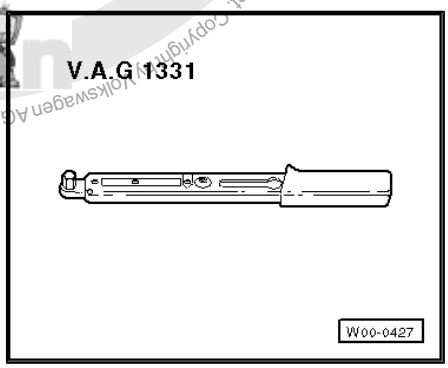

Protected by copyright. Copying for private or commercial purposes, in part or in whole, is not permitted unless authorised by Volkswagen AG. Volkswagen AG does not guarantee or accept any liability with respect to the correctness of information in this document. Copyright by Volkswagen AG.

Downloaded from www.Manualslib.com manuals search engine

Note

The use of penetrating fluid, contact spray or grease is prohibited since the lack of adhesion in the threads may cause a torque excess and, therefore, the breaking of the threaded connection.

> **WARNING**
>
> *Danger of injury! Observe warning notices and safety regulations ⇒ page 2 !*

Carry out following procedures:

- Disconnect the battery -A- ⇒ Electrical system; Rep. Gr. 27 .
- Check battery terminal clamp and battery terminal for corrosion and dirt.
- Clean battery clamp using wire brush of battery terminal cleaner with circular movements.

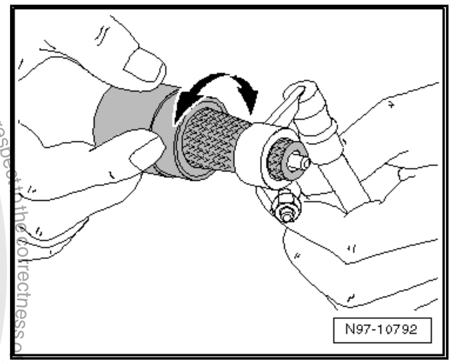

- Clean battery terminal using underside of battery terminal cleaner with circular movements.

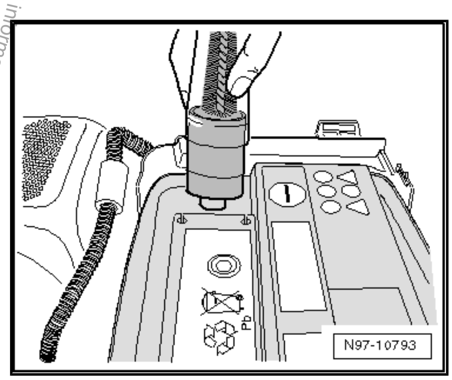

> **WARNING**
>
> *Danger of injury! Observe warning notices and safety regulations ⇒ page 2 !*

- Reconnect the battery -A- ⇒ Electrical system; Rep. Gr. 27 .

Note

Optimum contact is ensured when the components to be secured are tightened to the specified torque after cleaning.

3.1.4 Anti-corrosion treatment

> **Caution**
>
> *Missing anti-corrosion treatment results in damage to the onboard supply.*

Protected by copyright. Copying for private or commercial purposes, in part or in whole, is not permitted unless authorised by Volkswagen AG. Volkswagen AG does not guarantee or accept any liability with respect to the correctness of information in this document. Copyright by Volkswagen AG.

Downloaded from www.Manualslib.com manuals search engine

Note

- *All threaded connections must be tightened to specified torque.*
- *Always use hose supplied with anticorrosive agent tin.*
- *Use protection wax for cold area.*
- *Use cavity sealing agent for warm area.*
- *The sealing agent independently reaches the respective points through capillary action.*

Carry out following procedures:

– Hold injector below ring terminal and spray pin all around.

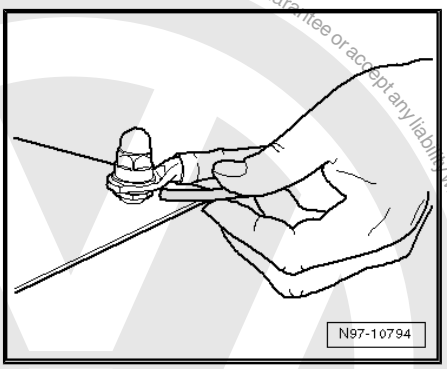

– Hold injector above ring terminal and spray pin and wiring eye all around.

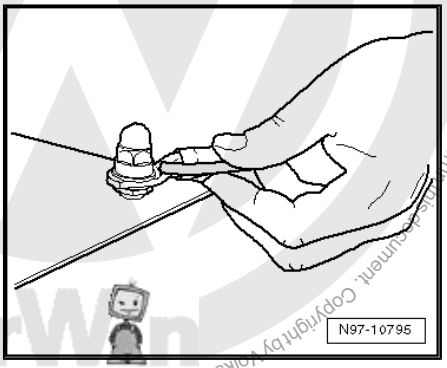

Protected by copyright. Copying for private or commercial purposes, in part or in whole, is not permitted unless authorised by Volkswagen AG. Volkswagen AG does not guarantee or accept any liability with respect to the correctness of information in this document. Copyright by Volkswagen AG.

Downloaded from www.Manualslib.com manuals search engine

4 Renewing Lambda probe

Note

- *Do not repair lambda probe wires, since this can result in malfunctions.*
- *If necessary, replace attachment parts, cable ties or marking rings to match the uniform probe to the defective probe as specified.*
- *Identify the Lambda probe by way of the protective tube as required* *⇒ page 119* *.*

4.1 Renewing LSF Lambda probe (4-pin)

Note

- *If necessary, replace attachment parts, cable ties or marking rings to match the Lambda probe to the defective Lambda probe as specified.*
- *Do not repair lambda probe wires, since this can result in malfunctions.*

Carry out following procedures:

– Remove the defective Lambda probe.

– Place both Lambda probes next to each other so that the sensor housings are at the same height.

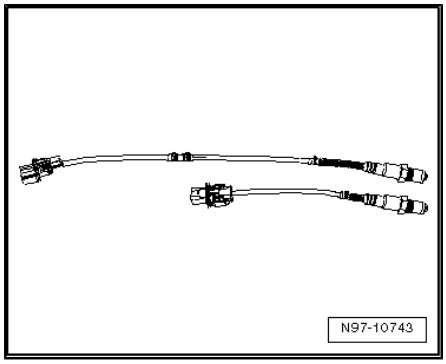

Downloaded from www.Manualslib.com manuals search engine

– Tie back any excess in the uniform probe length (approx. 50 - 250 mm) to the size of the defective Lambda probe and secure with cable ties -1-.
– Check that the connector housing of the Lambda probe is compatible with the onboard supply side.
– Replace the onboard supply system connector with the Lambda probe connector housing supplied ⇒ page 101 .

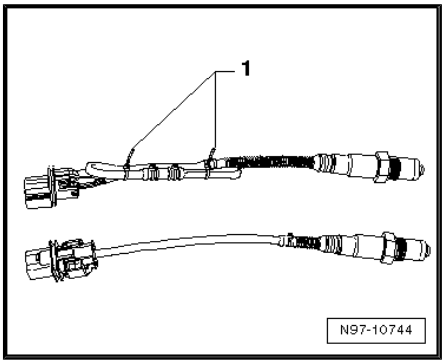

Note

- *The connector housing should only be replaced on older vehicles. On new vehicles, the connector housing coding matches.*
- *Observe pin assignment. For reasons of clarity, respective pins in new connector housing have a colour marking.*
- *Further notes can be found in the leaflet of the new lambda probe.*

– Install the new Lambda probe in the vehicle.

4.2 Renewing LSU Lambda probe (6-pin)

Note

- *If necessary, replace attachment parts, cable ties or marking rings to match the Lambda probe to the defective Lambda probe as specified.*
- *The wires should not be crimped or cut as otherwise the function of the Lambda probe will be impaired.*

Carry out following procedures:

– Remove the old Lambda probe.
– Place both Lambda probes next to each other so that the sensor housings are at the same height.

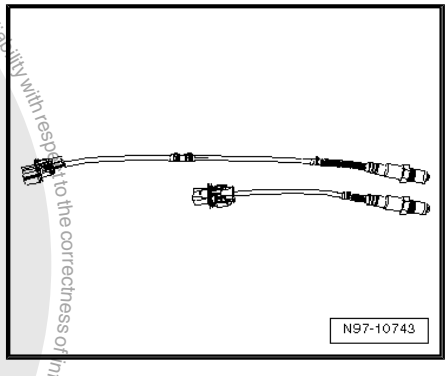

Protected by copyright. Copying for private or commercial purposes, in part or in whole, is not permitted unless authorised by Volkswagen AG. Volkswagen AG does not guarantee or accept any liability with respect to the correctness of information in this document. Copyright by Volkswagen AG.

Downloaded from www.Manualslib.com manuals search engine

– Tie back any excess in the uniform probe length (approx. 50 - 250 mm) to the size of the defective probe and secure with cable ties -1-.
– Install the new Lambda probe in the vehicle.

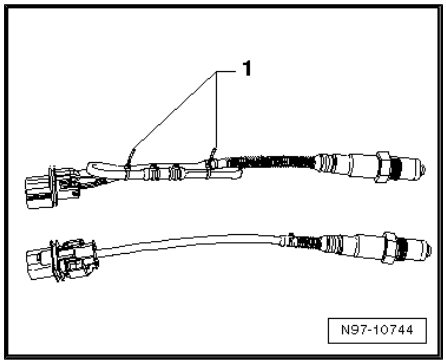

4.3 Types of protective tube on uniform Lambda probes

Note

In addition to identifying by way of the part number, the protective tube can also be used as a means of identification.

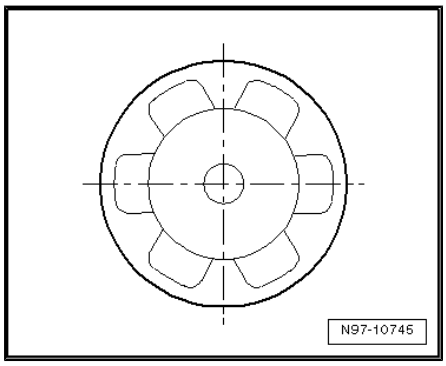

Type D1: 6 openings at 3.5 mm each

Only used on 4-pin LSF Lambda probes.

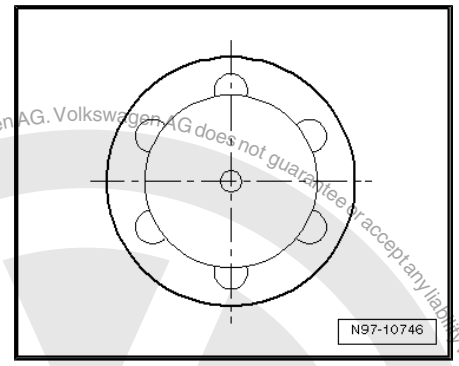

Type D2: 6 openings at 2 mm each

Only used on 4-pin LSF Lambda probes and 6-pin LSU Lambda probes.

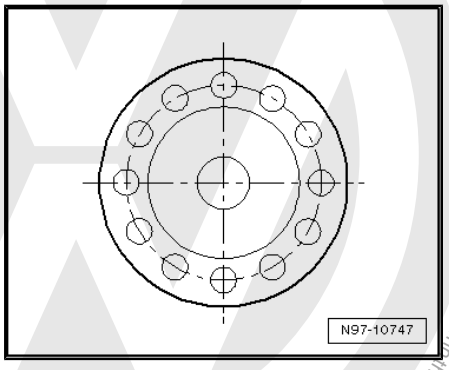

Type D4: 12 openings at 1.4 mm each

Only used on 4-pin LSF Lambda probes and 6-pin LSU Lambda probes.

Protected by copyright. Copying for private or commercial purposes, in part or in whole, is not permitted unless authorised by Volkswagen AG. Volkswagen AG does not guarantee or accept any liability with respect to the correctness of information in this document. Copyright by Volkswagen AG.

Downloaded from www.Manualslib.com manuals search engine